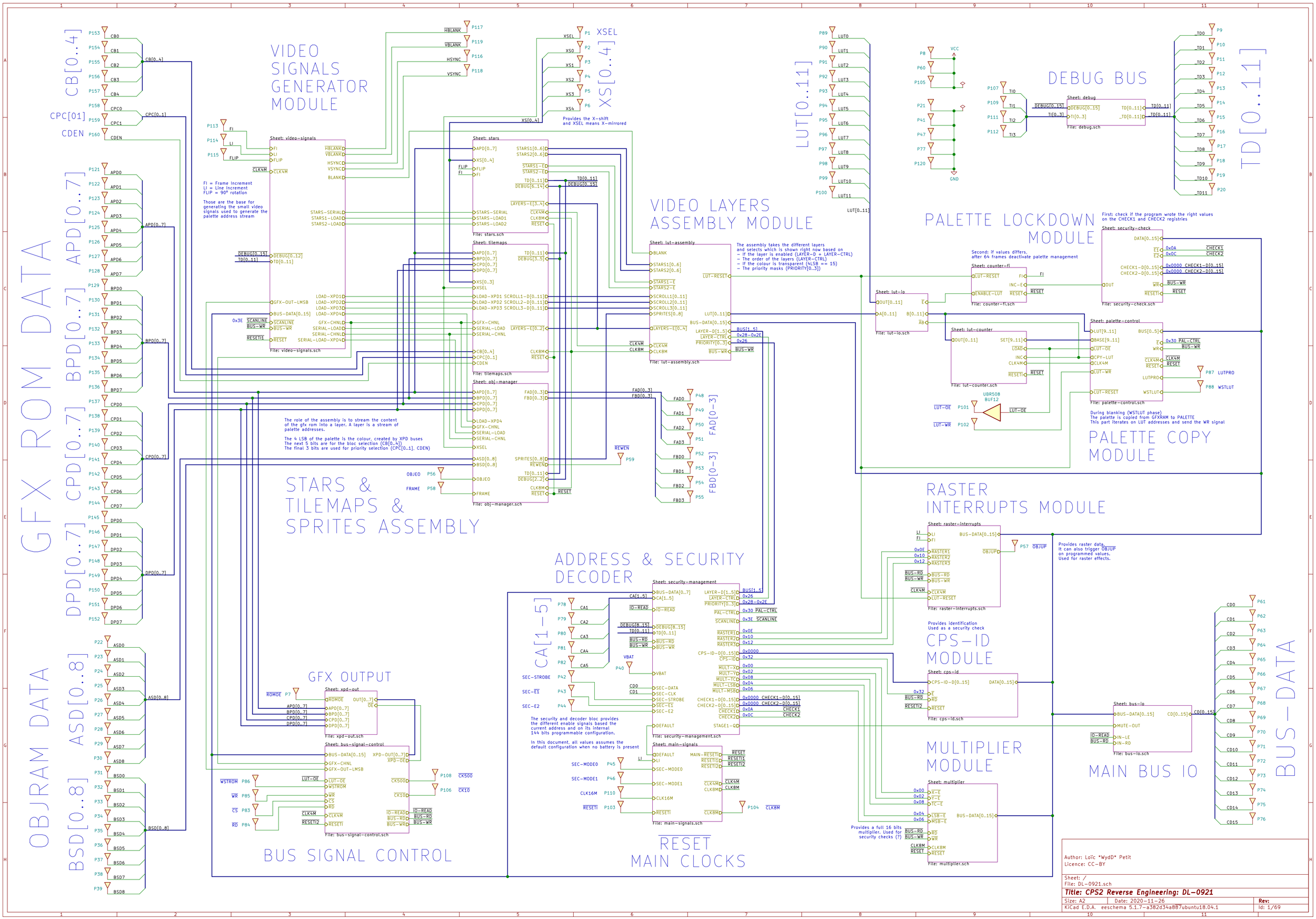
GFX ROM DATA
CB[0..4]
CPC[01]
CDEN
CPD[0..7] BPD[0..7] APD[0..7]
DPD[0..7]
OBJRAM DATA
BSD[0..8] ASD[0..8]
VIDEO SIGNALS GENERATOR MODULE
Sheet: video-signals
File: video-signals.sch
FI = Frame Increment
LI = Line Increment
FLIP = 90° rotation
Those are the base for generating the small video signals used to generate the palette address stream
XSEL
XS[0..4]
Provides the X-shift and XSEL means X-mirrored
LUT[0..11]
VIDEO LAYERS ASSEMBLY MODULE
Sheet: lut-assembly
File: lut-assembly.sch
The assembly takes the different layers and selects which is shown right now based on
- If the layer is enabled (LAYER-D + LAYER-CTRL)
- The order of the layers (LAYER-CTRL)
- If the colour is transparent (4LSB == 15)
- The priority masks (PRIORITY[0..3])
Sheet: stars
File: stars.sch
Sheet: tilemaps
File: tilemaps.sch
Sheet: obj-manager
File: obj-manager.sch
The role of the assembly is to stream the content of the gfx rom into a layer. A layer is a stream of palette addresses.
The 4 LSB of the palette is the colour, created by XPD buses
The next 5 bits are for the bloc selection (CB[0..4])
The final 3 bits are used for priority selection (CPC[0..1], CDEN)
STARS & TILEMAPS & SPRITES ASSEMBLY
FAD[0-3]
FBD[0-3]
DEBUG BUS
Sheet: debug
File: debug.sch
TD[0..11]
PALETTE LOCKDOWN MODULE
First: check if the program wrote the right values on the CHECK1 and CHECK2 registries
Sheet: security-check
File: security-check.sch
Second: if values differs, after 64 frames deactivate palette management
Sheet: counter-fi
File: counter-fi.sch
Sheet: lut-io
File: lut-io.sch
Sheet: lut-counter
File: lut-counter.sch
Sheet: palette-control
File: palette-control.sch
UBR508 BUF12
During blanking (WSTLUT phase)
The palette is copied from GFXRAM to PALETTE
This part iterates on LUT addresses and send the WR signal
PALETTE COPY MODULE
RASTER INTERRUPTS MODULE
Sheet: raster-interrupts
File: raster-interrupts.sch
Provides raster data.
It can also trigger OBJUP on programmed values.
Used for raster effects.
ADDRESS & SECURITY DECODER
CA[1-5]
Sheet: security-management
File: security-management.sch
The security and decoder bloc provides the different enable signals based the current address and on its internal 144 bits programmable configuration.
In this document, all values assumes the default configuration when no battery is present
Provides identification
Used as a security check
CPS-ID MODULE
Sheet: cps-id
File: cps-id.sch
GFX OUTPUT
Sheet: xpd-out
File: xpd-out.sch
Sheet: bus-signal-control
File: bus-signal-control.sch
BUS SIGNAL CONTROL
Sheet: main-signals
File: main-signals.sch
RESET MAIN CLOCKS
MULTIPLIER MODULE
Sheet: multiplier
File: multiplier.sch
Provides a full 16 bits multiplier. Used for security checks (?)
MAIN BUS IO
Sheet: bus-io
File: bus-io.sch
BUS-DATA
Author: Loïc *WydD* Petit
Licence: CC-BY
Sheet: /
File: DL-0921.sch
Title: CPS2 Reverse Engineering: DL-0921
Size: A2
Date: 2020-11-26
Rev:
KiCad E.D.A. eeschema 5.1.7-a382d34a887ubuntu18.04.1
Id: 1/69

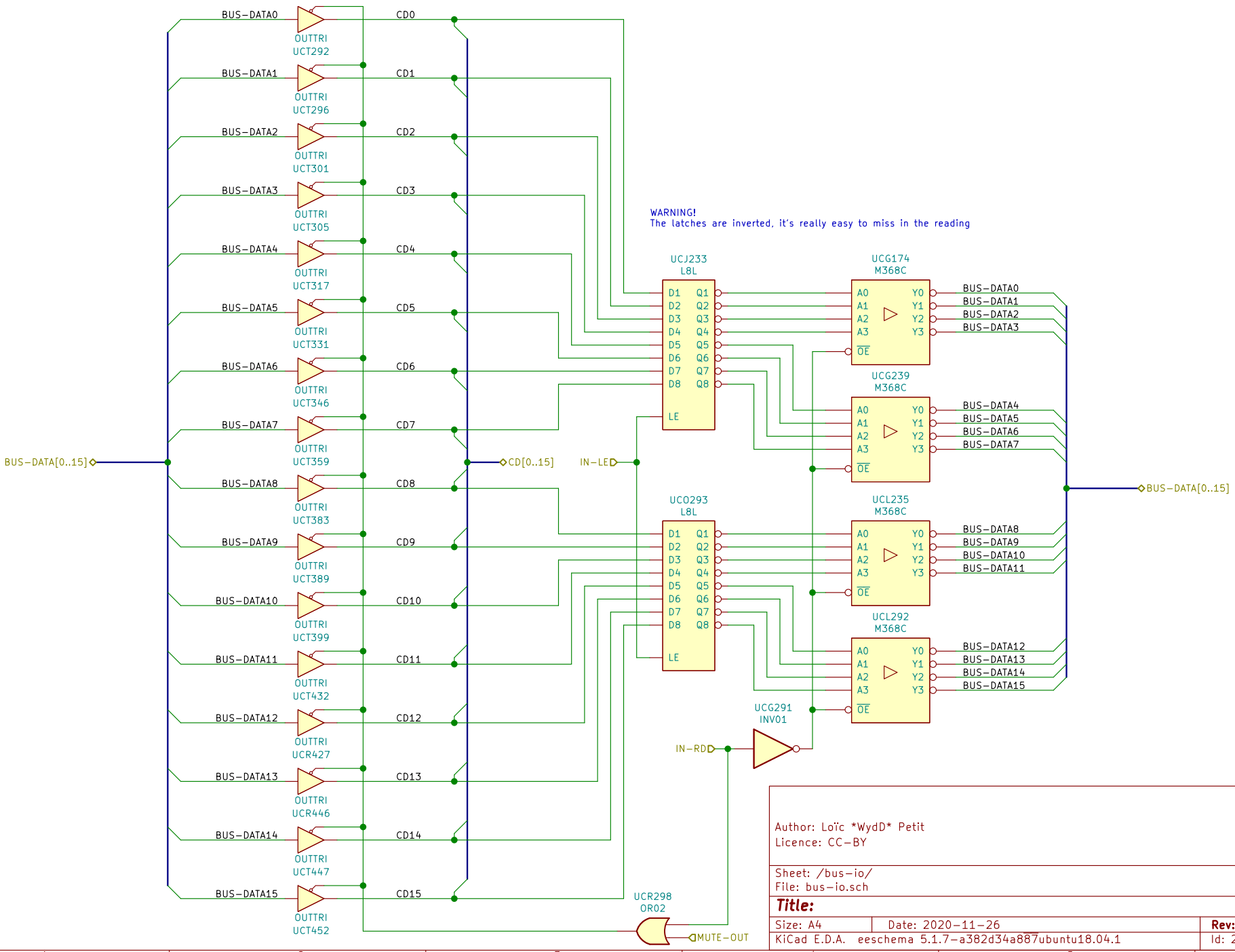

Author: Loïc *WydD* Petit
Licence: CC-BY

Sheet: /bus-io/
File: bus-io.sch

Title:

Size: A4	Date: 2020-11-26	Rev:
KiCad E.D.A. eeschema 5.1.7-a382d34a887ubuntu18.04.1		Id: 2/69

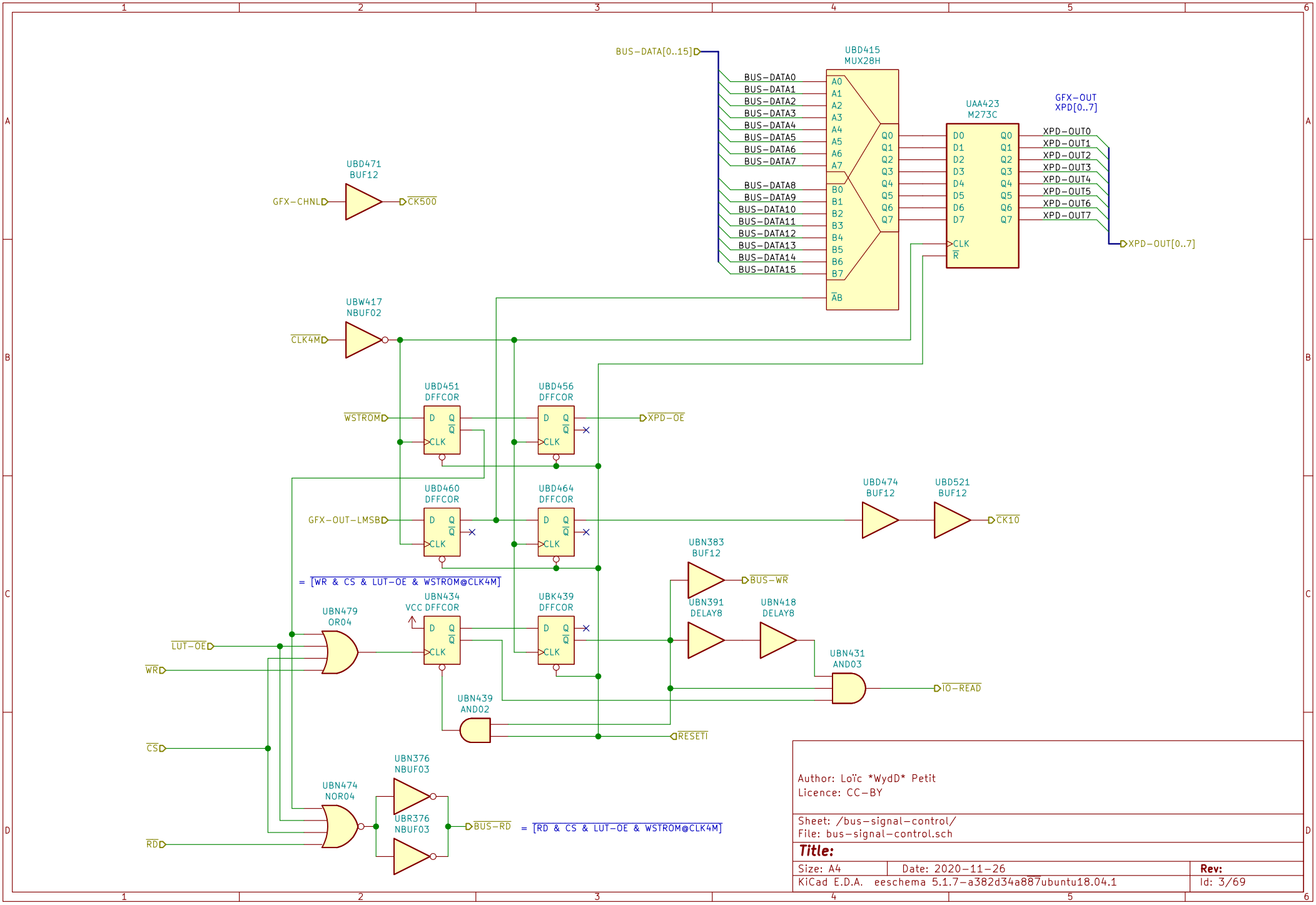
BUS-DATA[0..15]
UBD415
MUX28H
BUS-DATA0
BUS-DATA1
BUS-DATA2
BUS-DATA3
BUS-DATA4
BUS-DATA5
BUS-DATA6
BUS-DATA7
BUS-DATA8
BUS-DATA9
BUS-DATA10
BUS-DATA11
BUS-DATA12
BUS-DATA13
BUS-DATA14
BUS-DATA15
A0 A1 A2 A3 A4 A5 A6 A7
B0 B1 B2 B3 B4 B5 B6 B7
AB
Q0 Q1 Q2 Q3 Q4 Q5 Q6 Q7
UAA423
M273C
D0 D1 D2 D3 D4 D5 D6 D7
CLK
R
GFX-OUT
XPD[0..7]
XPD-OUT0
XPD-OUT1
XPD-OUT2
XPD-OUT3
XPD-OUT4
XPD-OUT5
XPD-OUT6
XPD-OUT7
XPD-OUT[0..7]
UBD471
BUF12
GFX-CHNL
CK500
UBW417
NBUF02
CLK4M
UBD451
DFFCOR
WSTROM
UBD456
DFFCOR
XPD-OE
UBD460
DFFCOR
GFX-OUT-LMSB
UBD464
DFFCOR
UBD474
BUF12
UBD521
BUF12
CK10
UBN383
BUF12
BUS-WR
= [WR & CS & LUT-OE & WSTROM@CLK4M]
UBN434
VCC DFFCOR
UBK439
DFFCOR
UBN391
DELAY8
UBN418
DELAY8
UBN479
OR04
LUT-OE
WR
UBN431
AND03
IO-READ
UBN439
AND02
RESETI
CS
UBN376
NBUF03
UBN474
NOR04
UBR376
NBUF03
BUS-RD
= [RD & CS & LUT-OE & WSTROM@CLK4M]
RD
Author: Loïc *WydD* Petit
Licence: CC-BY
Sheet: /bus-signal-control/
File: bus-signal-control.sch
Title:
Size: A4
Date: 2020-11-26
Rev:
KiCad E.D.A. eeschema 5.1.7-a382d34a887ubuntu18.04.1
Id: 3/69

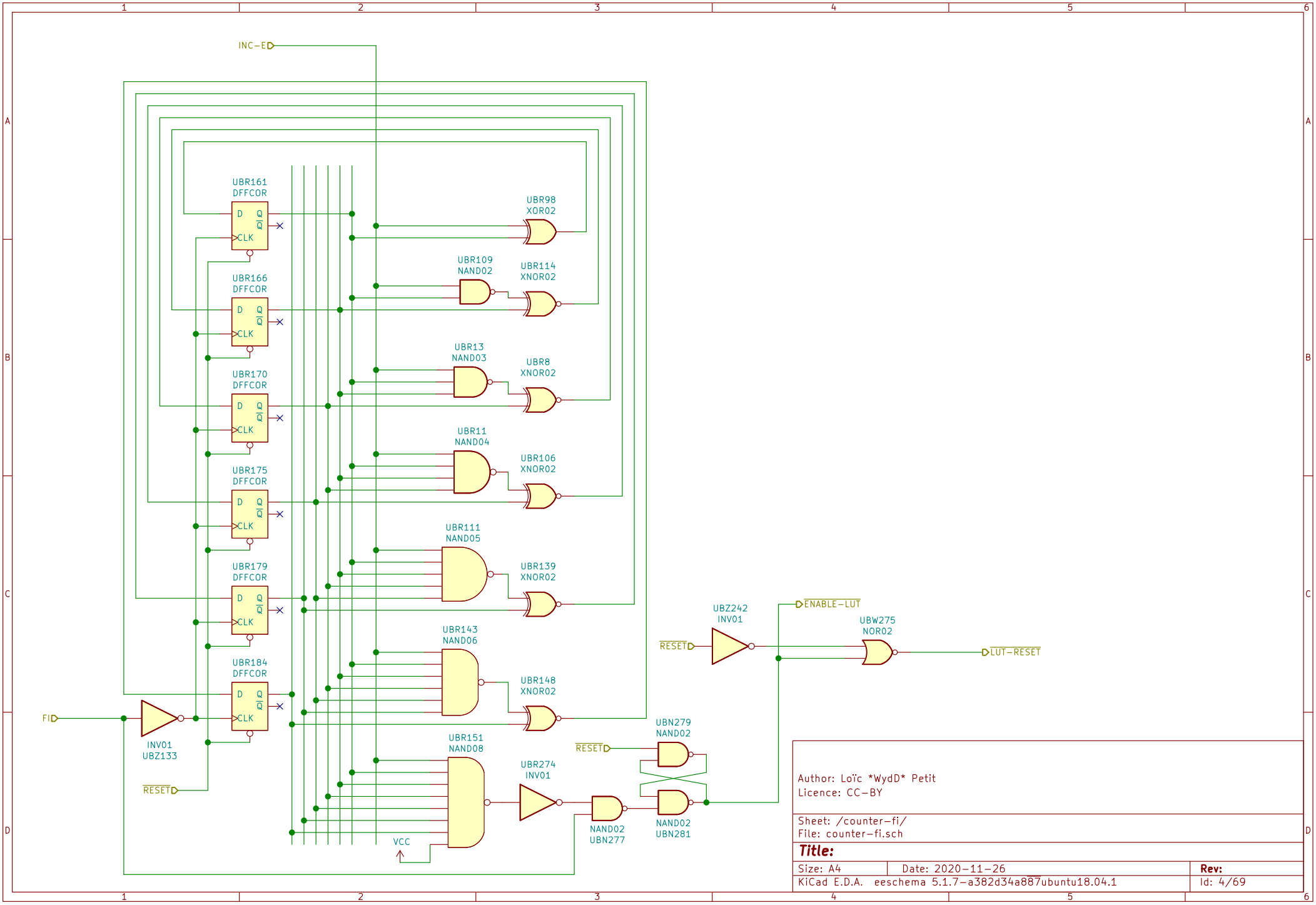
INC-E
UBR161
DFFCOR
UBR166
DFFCOR
UBR170
DFFCOR
UBR175
DFFCOR
UBR179
DFFCOR
UBR184
DFFCOR
D
Q
Q̄
CLK
UBR98
XOR02
UBR109
NAND02
UBR114
XNOR02
UBR13
NAND03
UBR8
XNOR02
UBR11
NAND04
UBR106
XNOR02
UBR111
NAND05
UBR139
XNOR02
UBR143
NAND06
UBR148
XNOR02
UBR151
NAND08
UBR274
INV01
FI
INV01
UBZ133
RESET
VCC
NAND02
UBN277
RESET
UBN279
NAND02
NAND02
UBN281
UBZ242
INV01
RESET
ENABLE-LUT
UBW275
NOR02
LUT-RESET
Author: Loïc *WydD* Petit
Licence: CC-BY
Sheet: /counter-fi/
File: counter-fi.sch
Title:
Size: A4
Date: 2020-11-26
Rev:
KiCad E.D.A. eeschema 5.1.7-a382d34a887ubuntu18.04.1
Id: 4/69

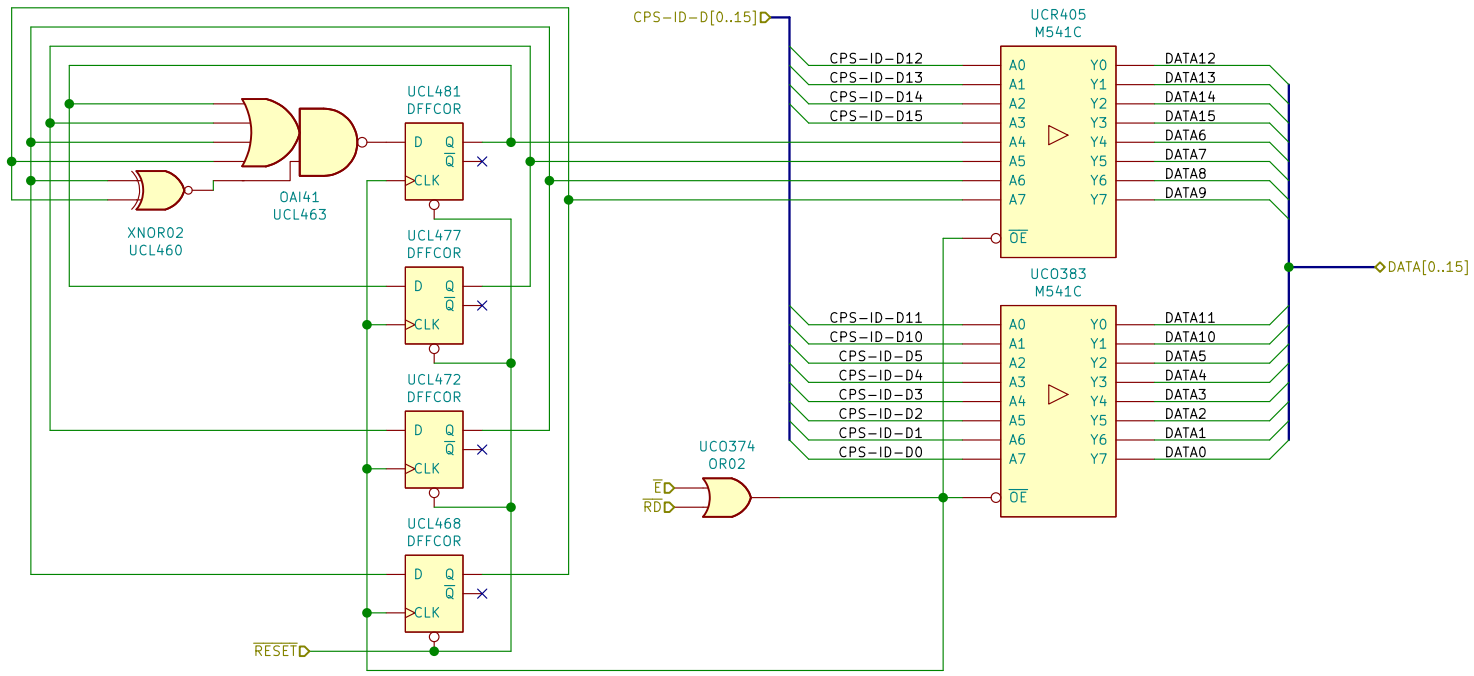

Author: Loïc *WydD* Petit
Licence: CC-BY

Sheet: /cps-id/
File: cps-id.sch

Title:

Size: A4	Date: 2020-11-26	**Rev:**
KiCad E.D.A. eeschema 5.1.7-a382d34a887ubuntu18.04.1		Id: 5/69

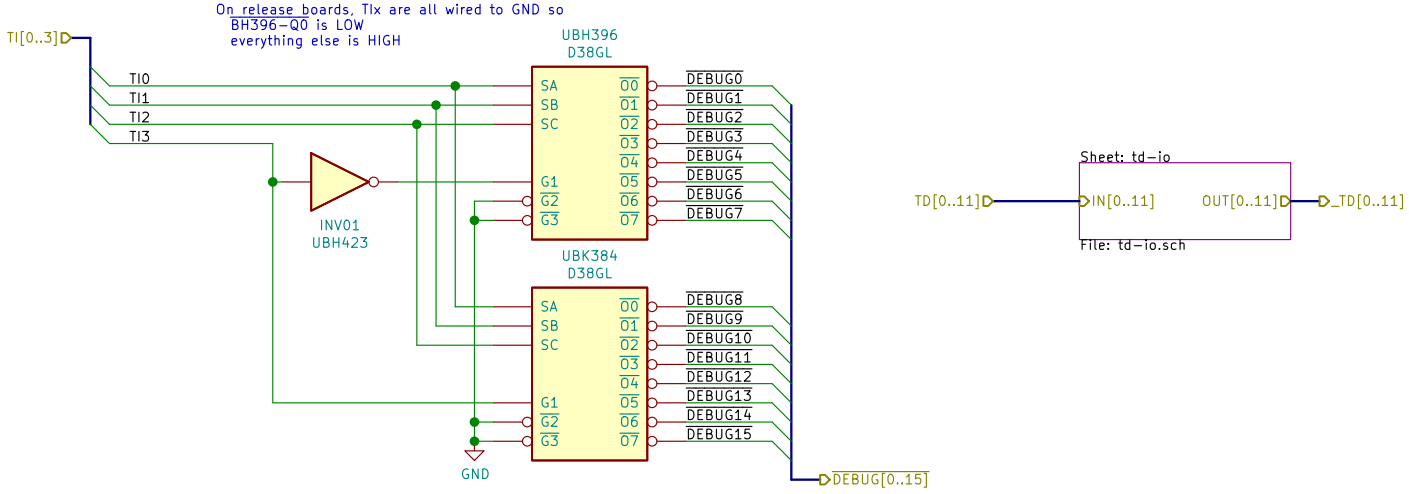

Author: Loïc *WydD* Petit
Licence: CC-BY

Sheet: /debug/
File: debug.sch

Title:

Size: A4	Date: 2020-11-26	**Rev:**
KiCad E.D.A. eeschema 5.1.7-a382d34a887ubuntu18.04.1		Id: 6/69

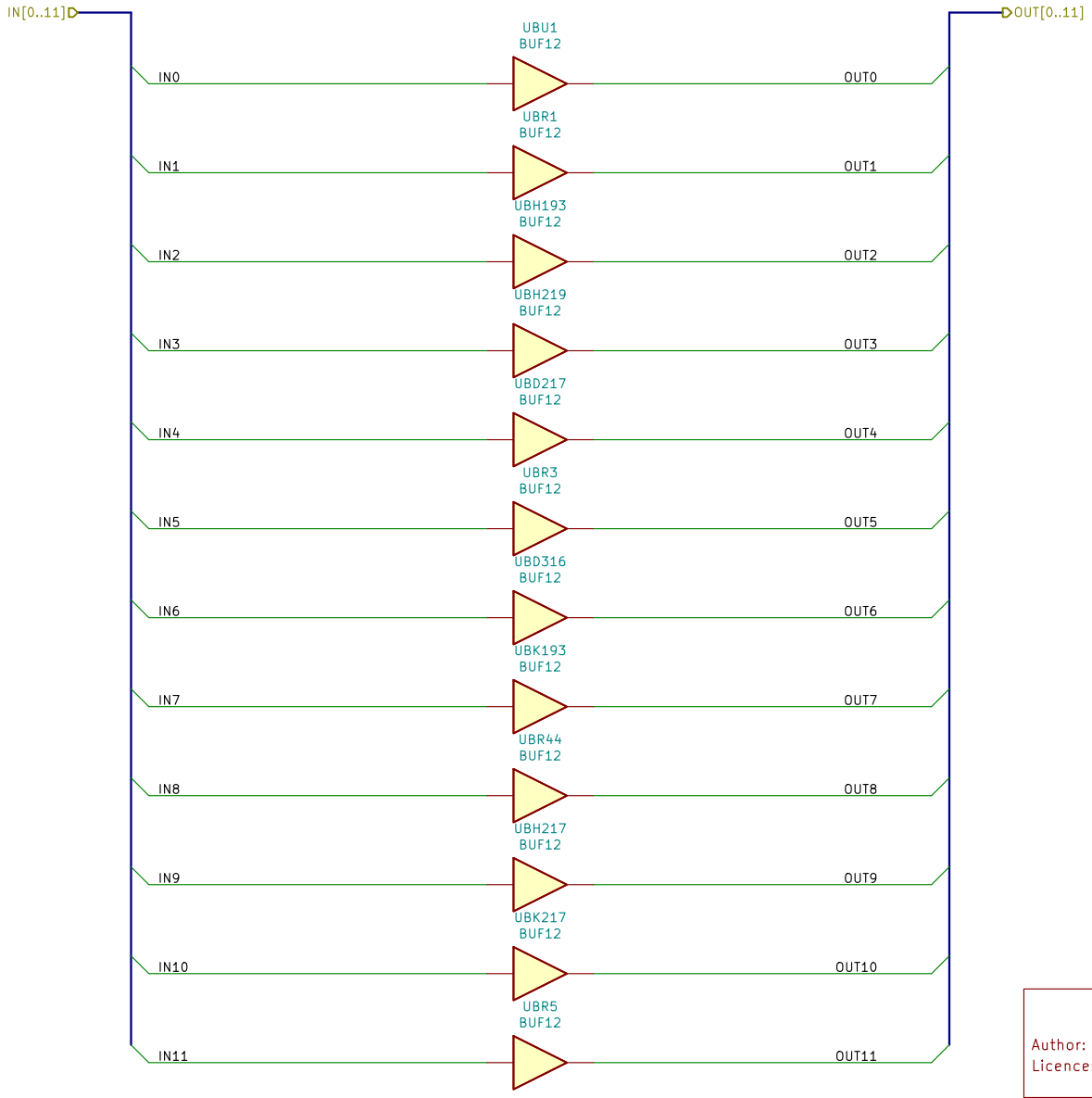

Author: Loïc *WydD* Petit
Licence: CC-BY

Sheet: /debug/td-io/
File: td-io.sch

Title:

Size: A4	Date: 2020-11-26	**Rev:**
KiCad E.D.A. eeschema 5.1.7-a382d34a887ubuntu18.04.1		Id: 7/69

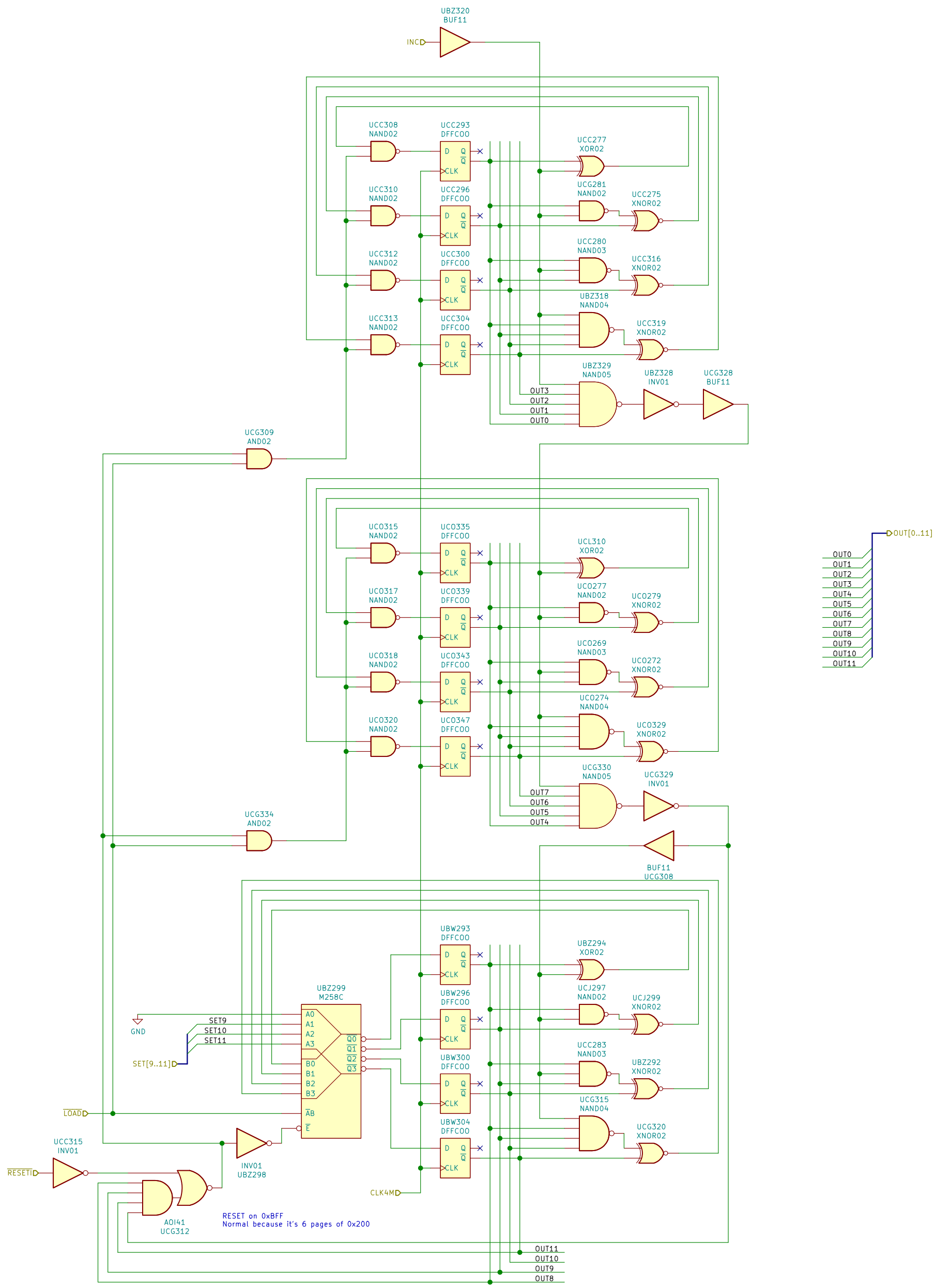

Author: Loïc *WydD* Petit
Licence: CC-BY

Sheet: /lut-counter/
File: lut-counter.sch

Title:

Size: A3	Date: 2020-11-26	Rev:
KiCad E.D.A. eeschema 5.1.7-a382d34a887ubuntu18.04.1		Id: 8/69

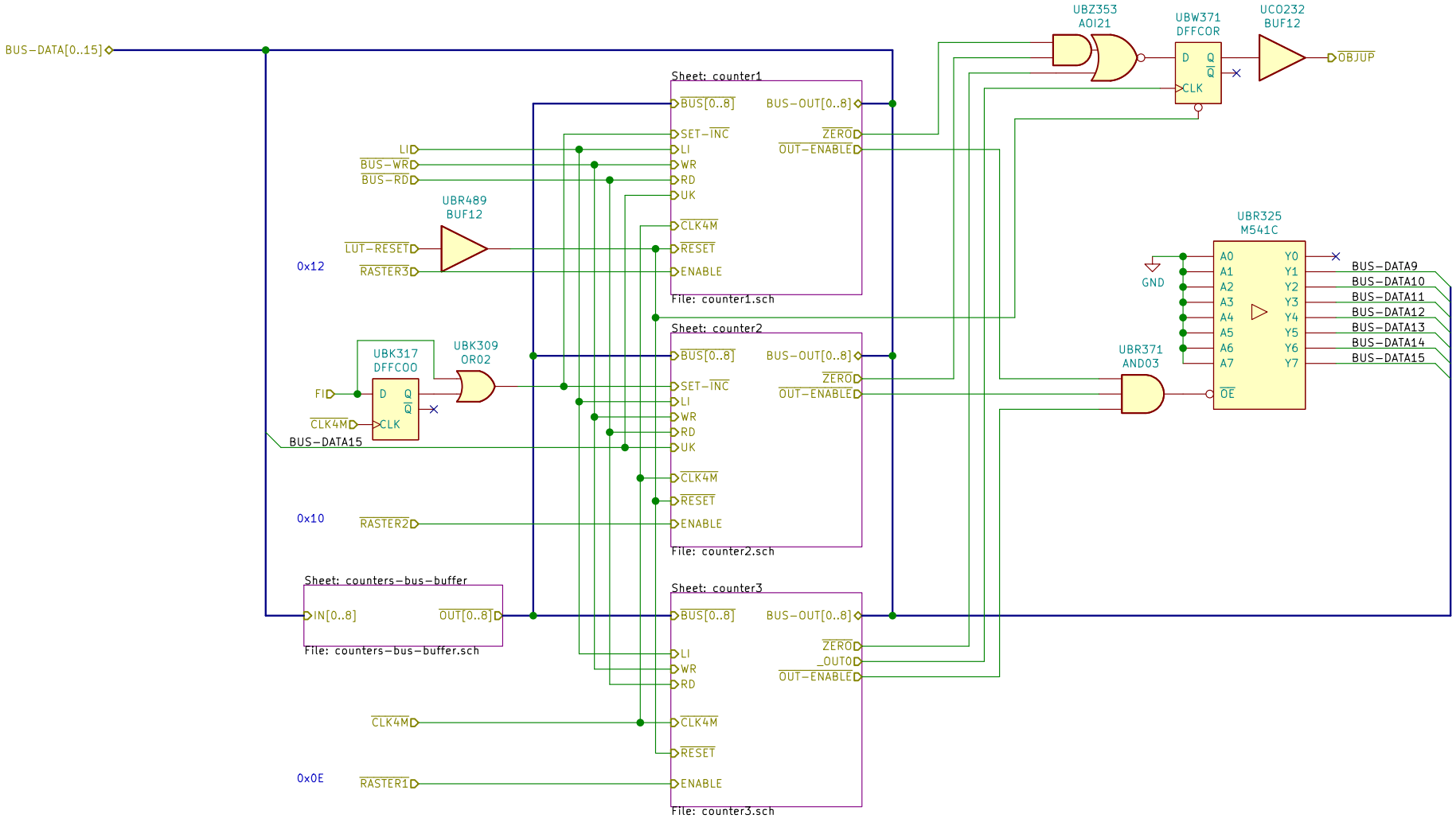

Author: Loïc *WydD* Petit
Licence: CC-BY

Sheet: /raster-interrupts/
File: raster-interrupts.sch

Title:

Size: A4	Date: 2020-11-26	**Rev:**
KiCad E.D.A. eeschema 5.1.7-a382d34a887ubuntu18.04.1		Id: 9/69

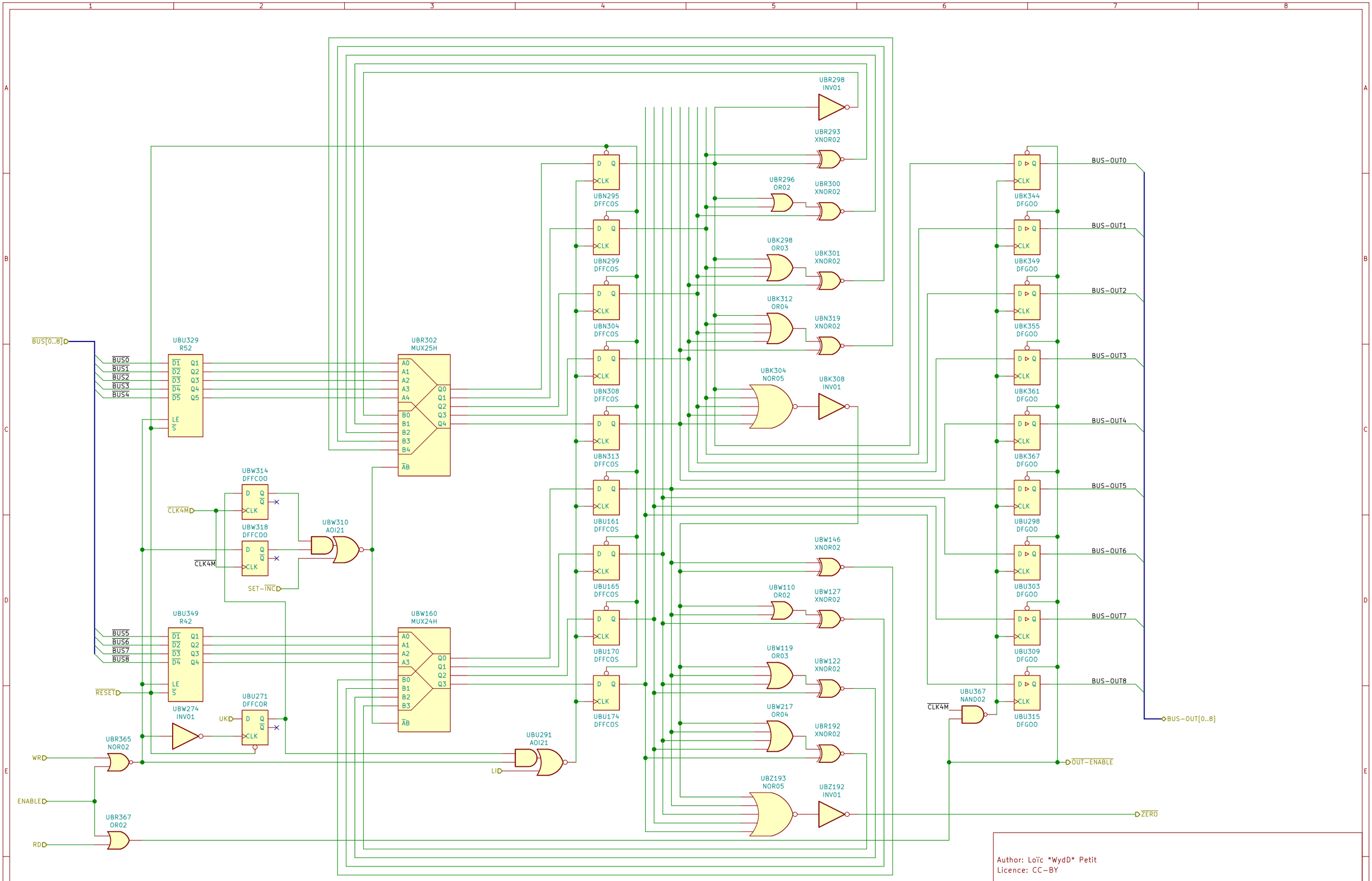

Author: Loïc *WydD* Petit
Licence: CC-BY

Sheet: /raster-interrupts/counter1/
File: counter1.sch

Title:

Size: A3	Date: 2020-11-26	Rev:
KiCad E.D.A. eeschema 5.1.7-a382d34a887ubuntu18.04.1		Id: 10/69

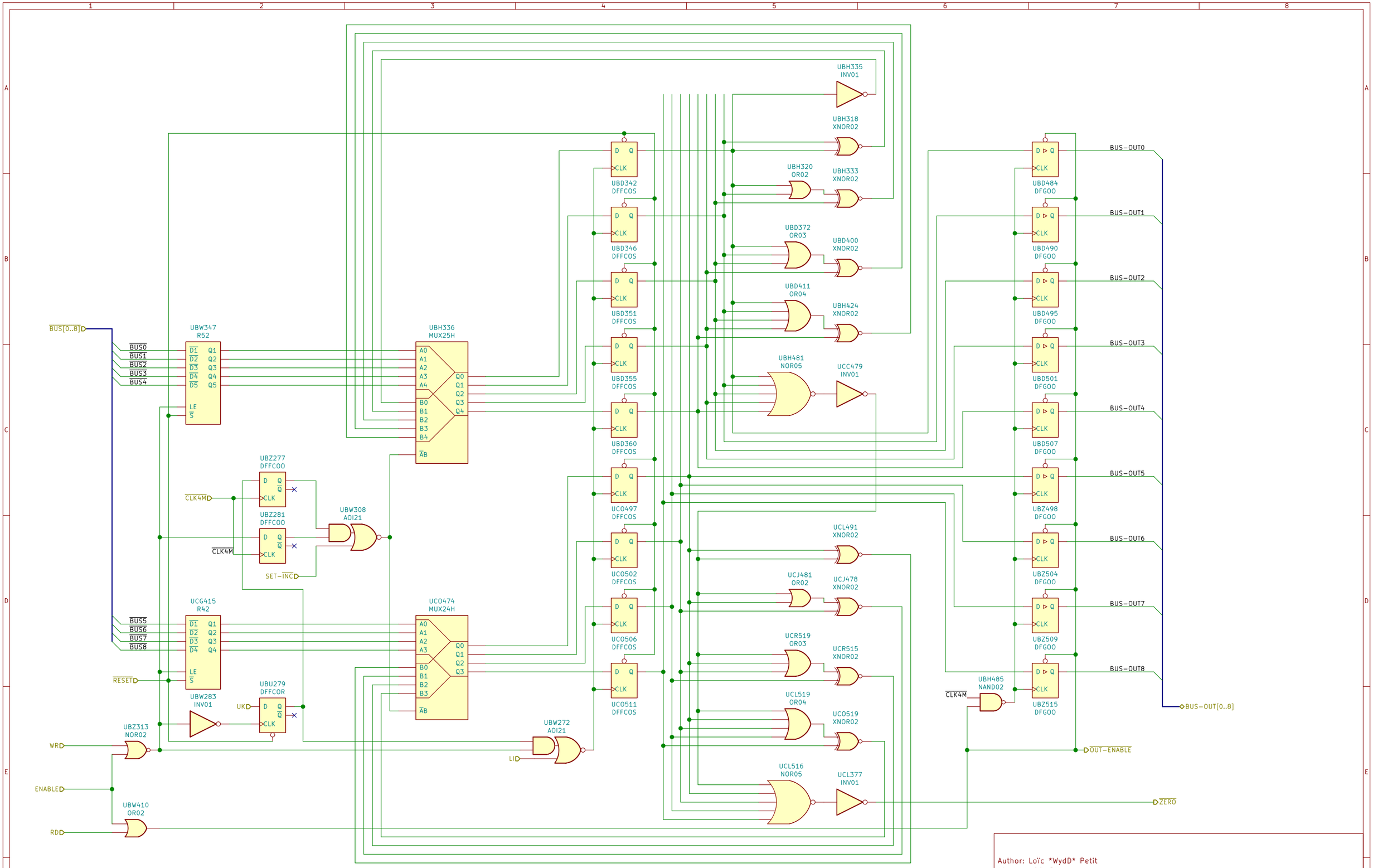

Author: Loïc *WydD* Petit
Licence: CC-BY

Sheet: /raster-interrupts/counter2/
File: counter2.sch

Title:

Size: A3	Date: 2020-11-26	Rev:
KiCad E.D.A. eeschema 5.1.7-a382d34a887ubuntu18.04.1		Id: 11/69

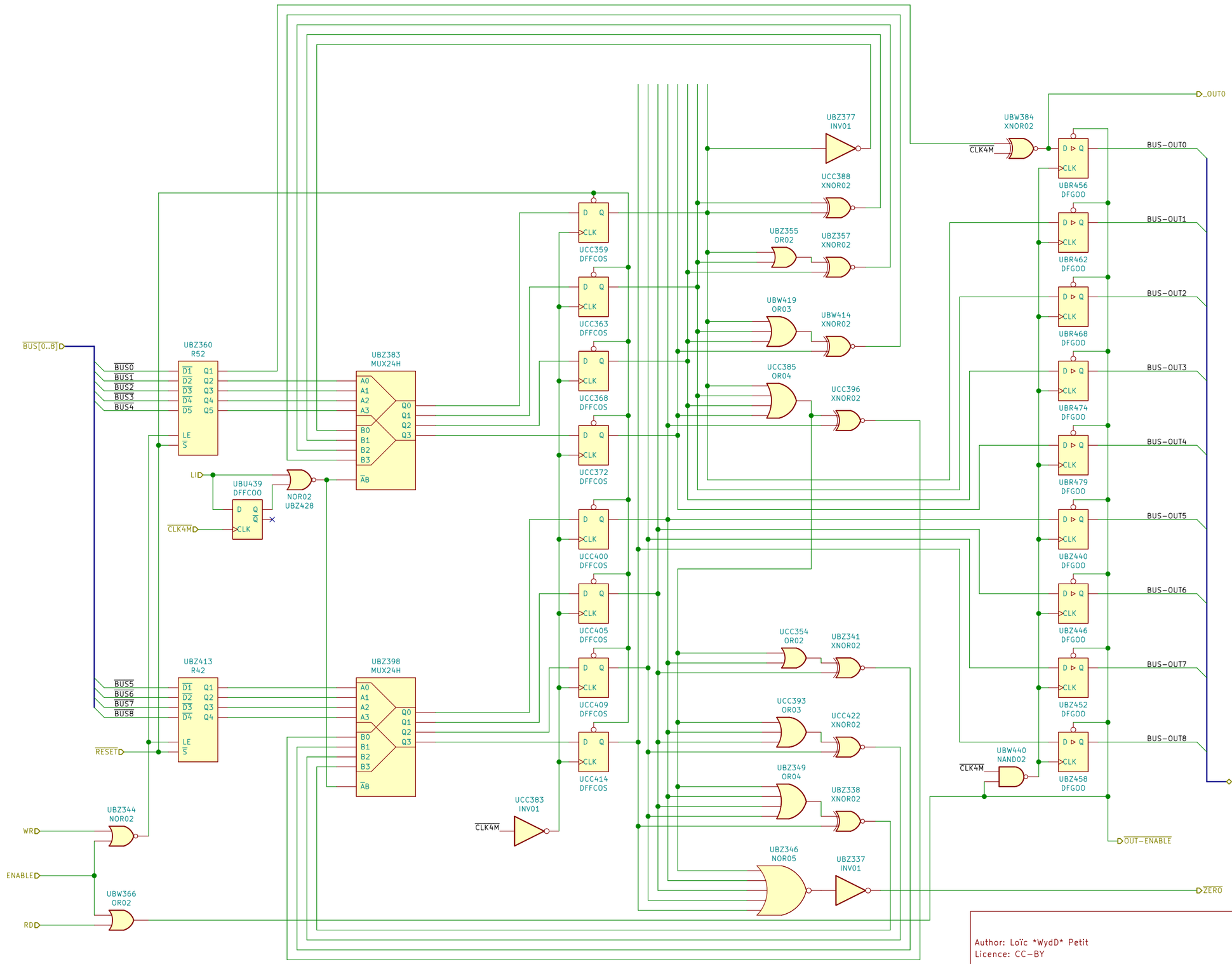

Author: Loïc *WydD* Petit
Licence: CC-BY

Sheet: /raster-interrupts/counter3/
File: counter3.sch

Title:

Size: A3	Date: 2020-11-26	Rev:
KiCad E.D.A. eeschema 5.1.7-a382d34a887ubuntu18.04.1		Id: 12/69

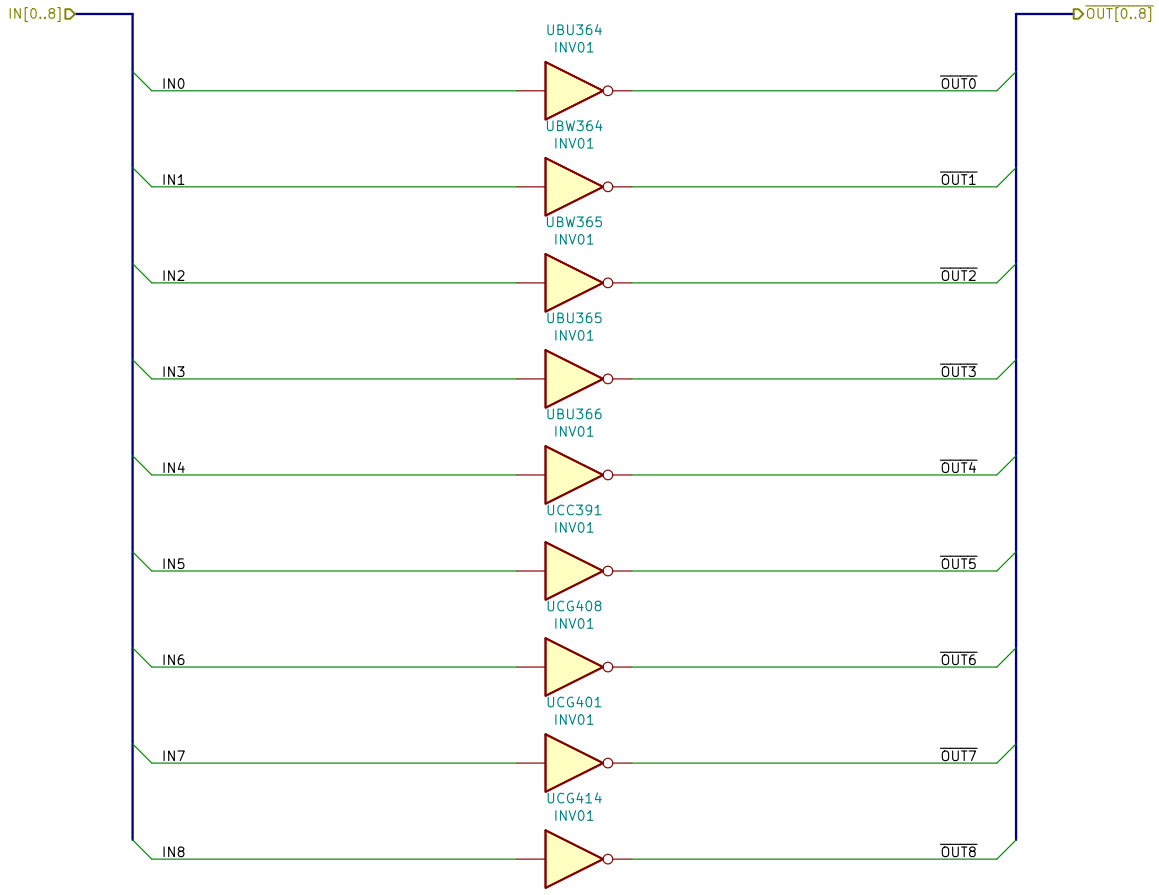

Author: Loïc *WydD* Petit
Licence: CC-BY

Sheet: /raster-interrupts/counters-bus-buffer/
File: counters-bus-buffer.sch

Title:

Size: A4	Date: 2020-11-26	**Rev:**
KiCad E.D.A. eeschema 5.1.7-a382d34a887ubuntu18.04.1		Id: 13/69

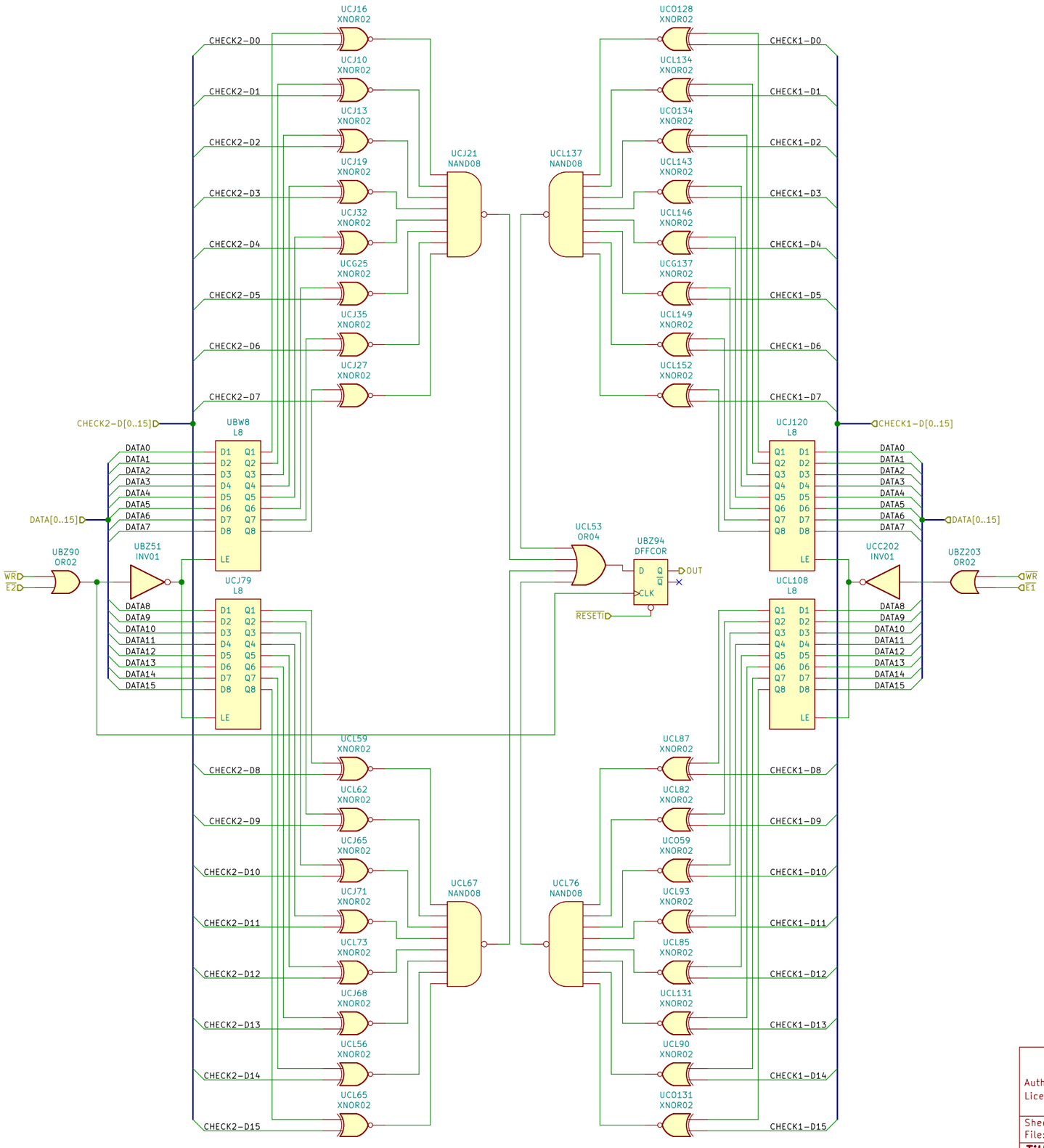

Author: Loïc *WydD* Petit
Licence: CC-BY

Sheet: /security-check/
File: security-check.sch

Title:

Size: A3	Date: 2020-11-26	Rev:
KiCad E.D.A. eeschema 5.1.7-a382d34a887ubuntu18.04.1		Id: 14/69

STARS LAYERS

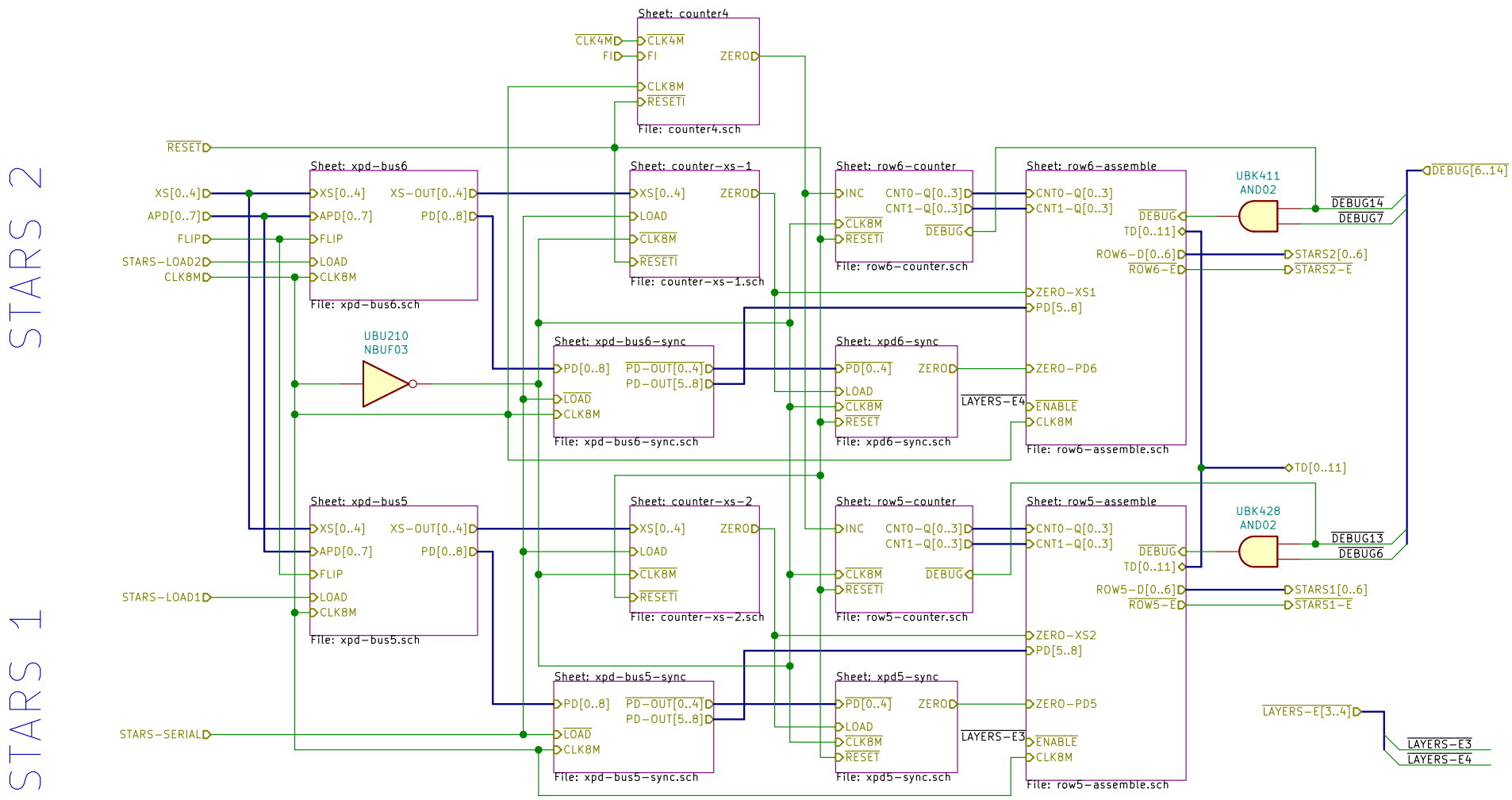

Author: Loïc *WydD* Petit
Licence: CC-BY

Sheet: /stars/
File: stars.sch

Title:

Size: A4	Date: 2020-11-26	**Rev:**
KiCad E.D.A. eeschema 5.1.7-a382d34a887ubuntu18.04.1		Id: 15/69

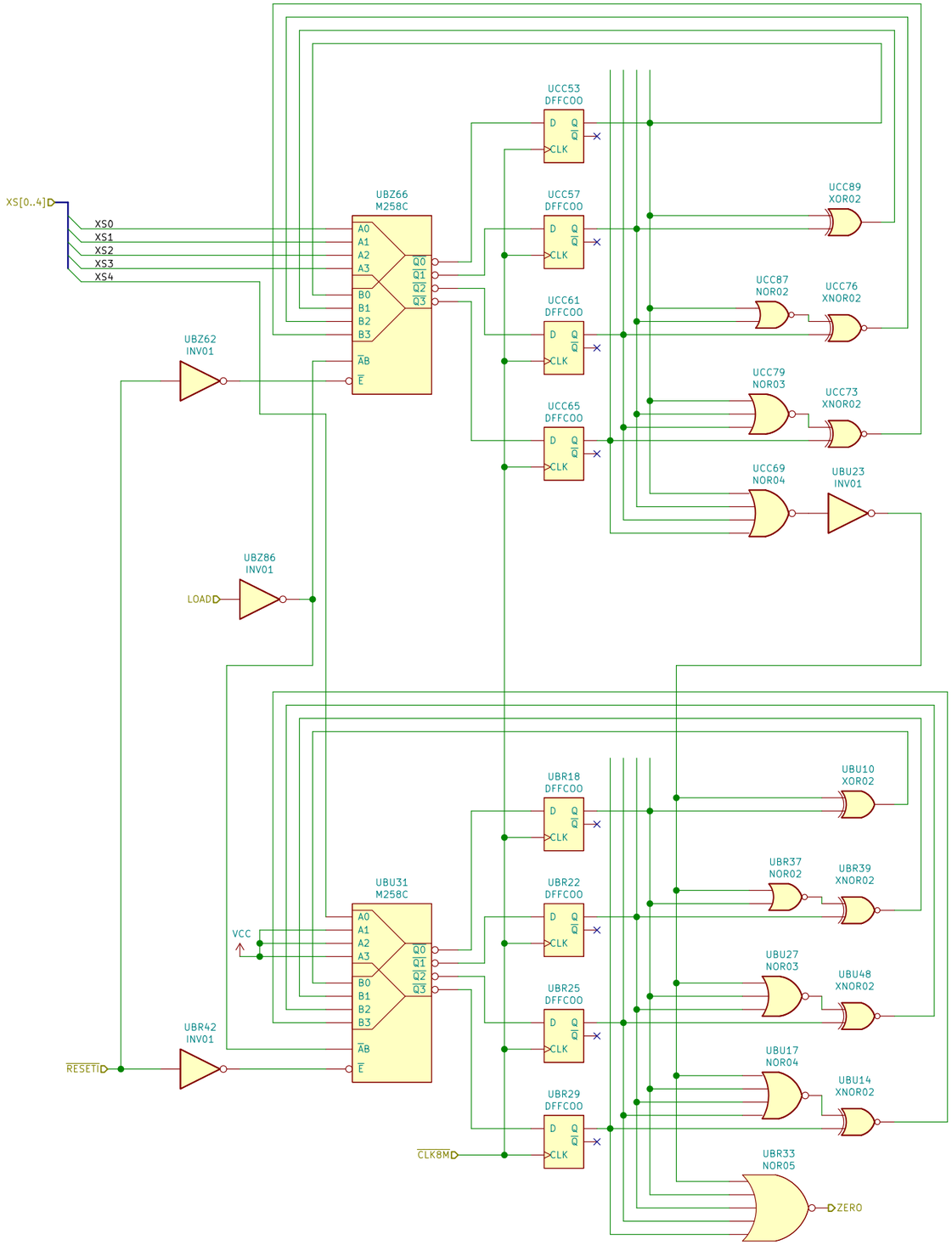

Author: Loïc *WydD* Petit
Licence: CC-BY

Sheet: /stars/counter-xs-2/
File: counter-xs-2.sch

Title:

Size: A3	Date: 2020-11-26	Rev:
KiCad E.D.A. eeschema 5.1.7-a382d34a887ubuntu18.04.1		Id: 16/69

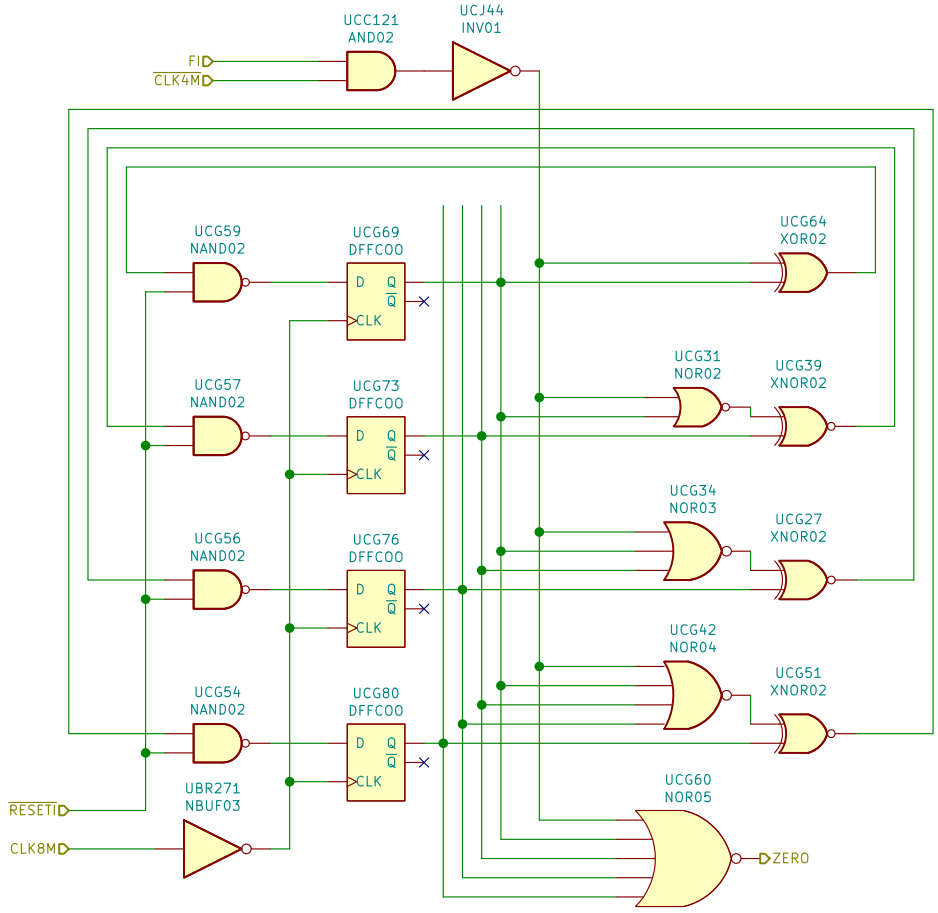

Author: Loïc *WydD* Petit
Licence: CC-BY

Sheet: /stars/counter4/
File: counter4.sch

Title:

Size: A4	Date: 2020-11-26	Rev:
KiCad E.D.A. eeschema 5.1.7-a382d34a887ubuntu18.04.1		Id: 17/69

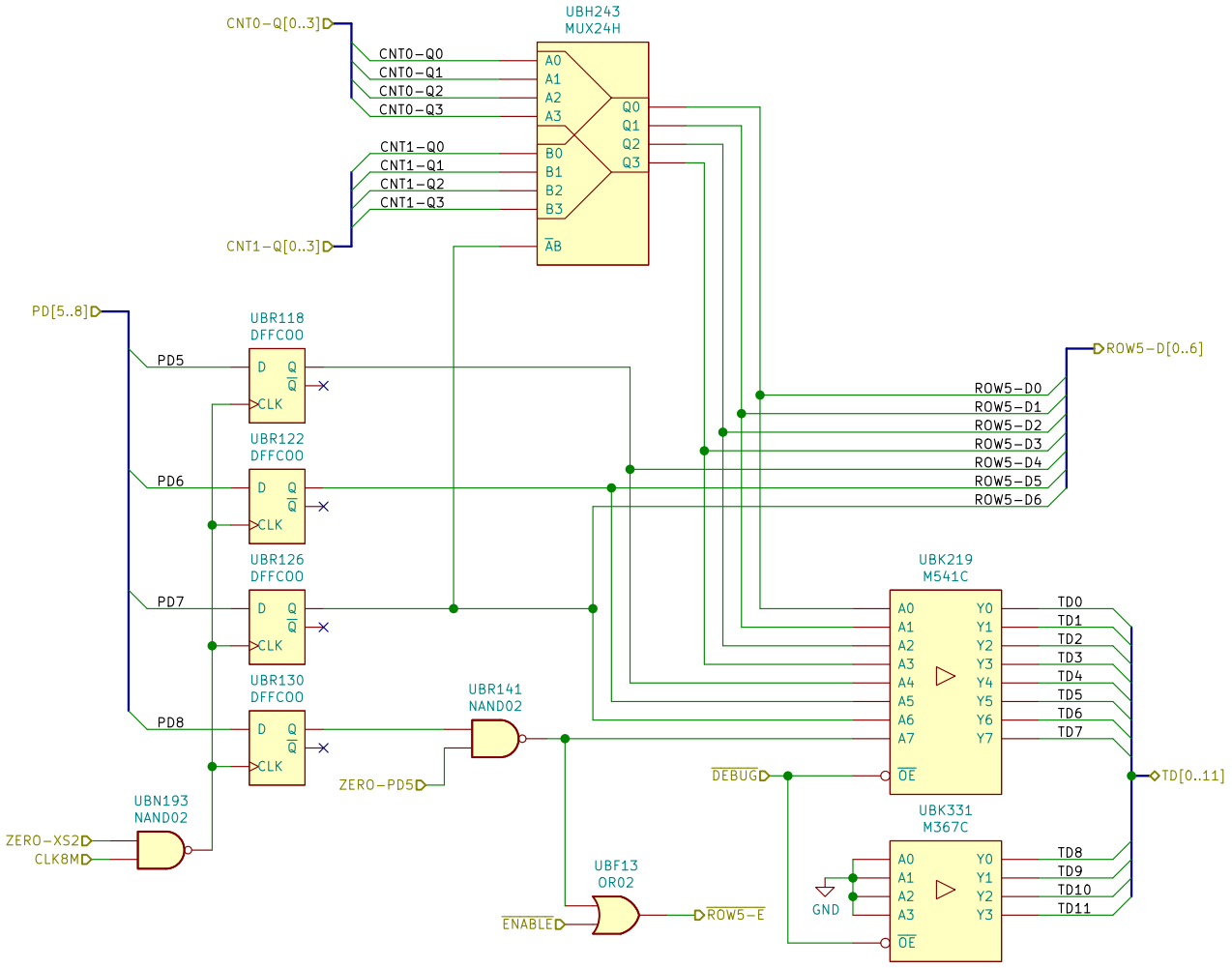

Author: Loïc *WydD* Petit
Licence: CC-BY

Sheet: /stars/row5-assemble/
File: row5-assemble.sch

Title:

Size: A4	Date: 2020-11-26	**Rev:**
KiCad E.D.A. eeschema 5.1.7-a382d34a887ubuntu18.04.1		Id: 18/69

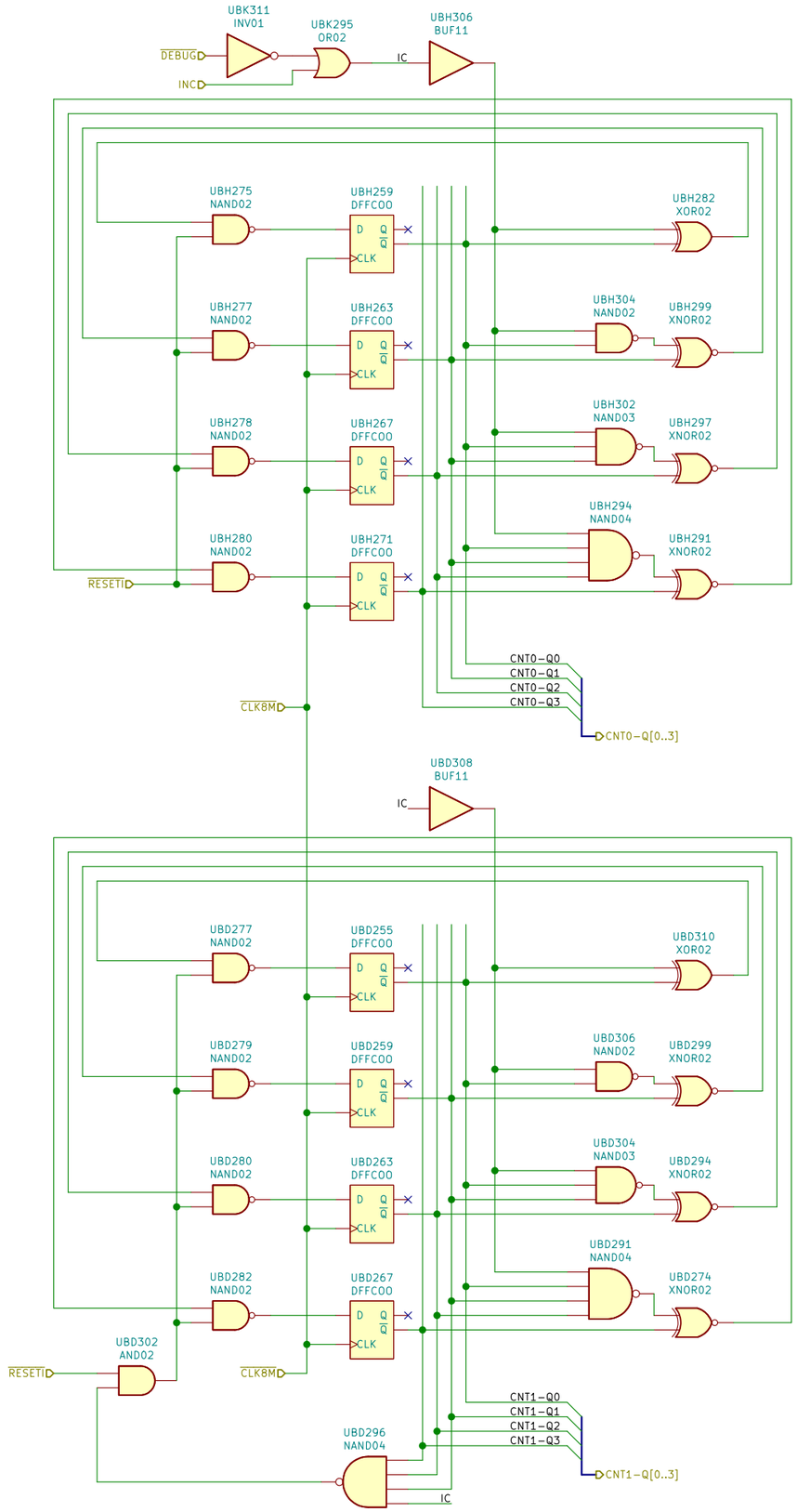

Author: Loïc *WydD* Petit
Licence: CC-BY

Sheet: /stars/row5-counter/
File: row5-counter.sch

Title:

Size: A3	Date: 2020-11-26	Rev:
KiCad E.D.A. eeschema 5.1.7-a382d34a887ubuntu18.04.1		Id: 19/69

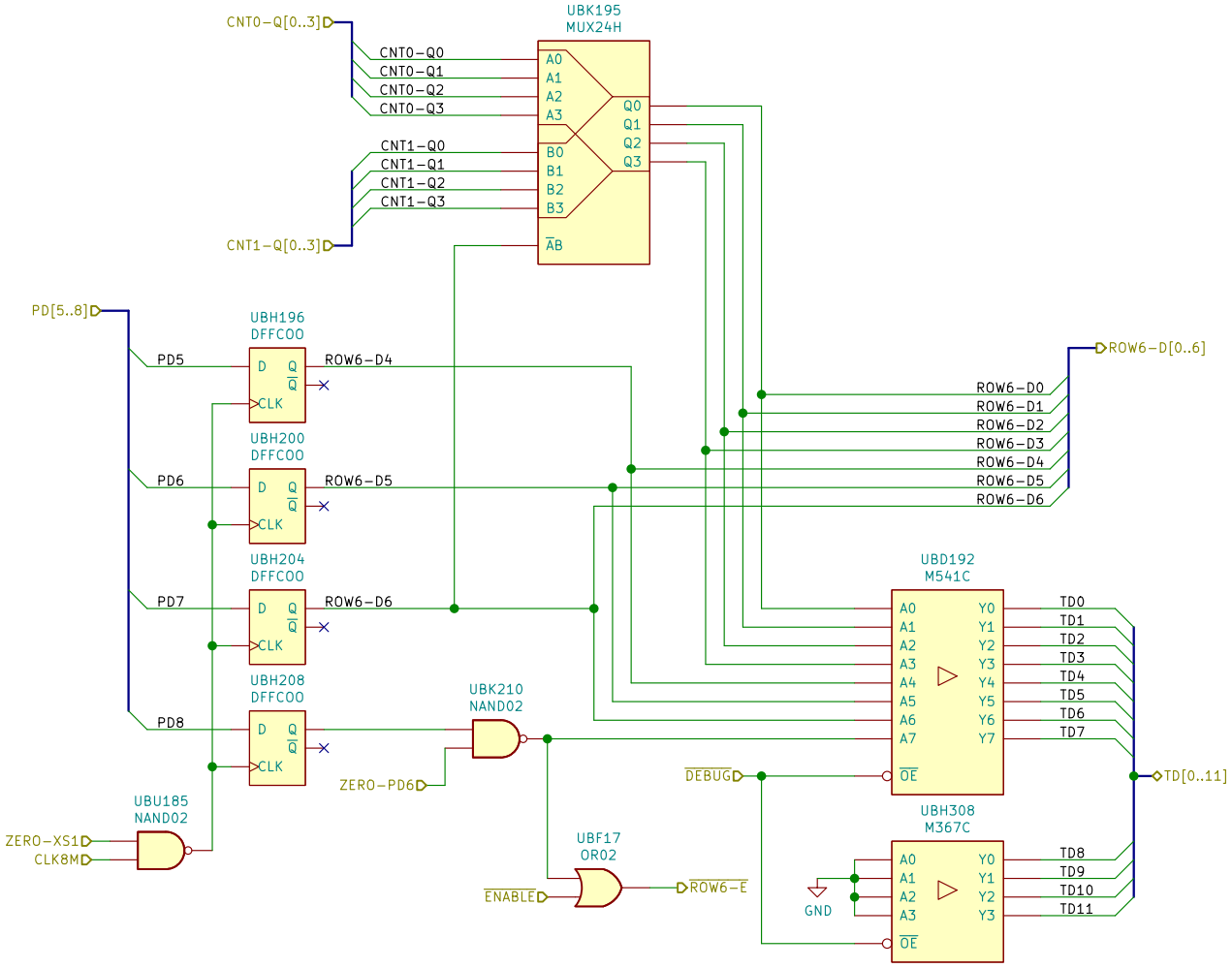

Author: Loïc *WydD* Petit
Licence: CC-BY

Sheet: /stars/row6-assemble/
File: row6-assemble.sch

Title:

Size: A4	Date: 2020-11-26	Rev:
KiCad E.D.A. eeschema 5.1.7-a382d34a887ubuntu18.04.1		Id: 20/69

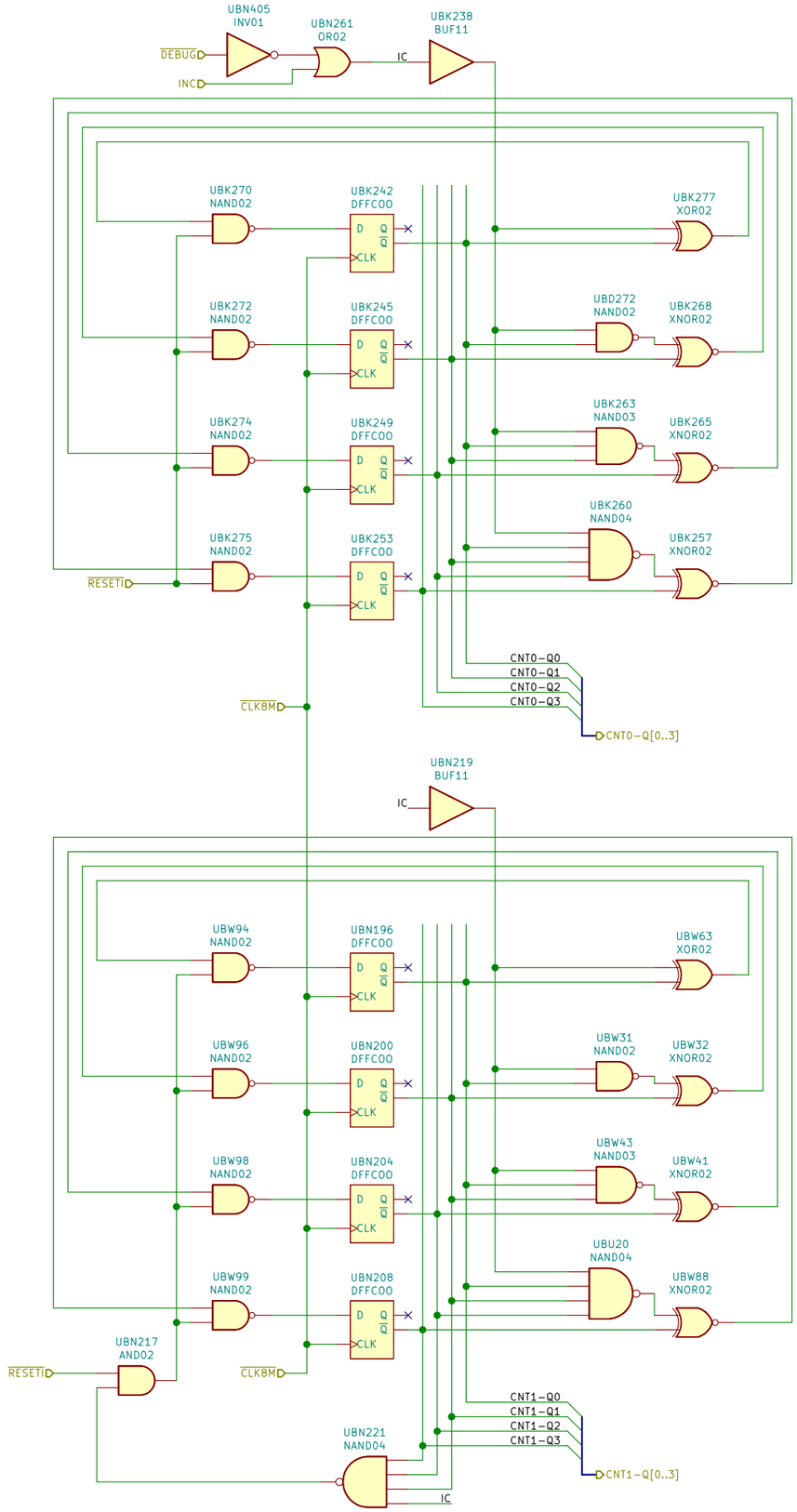

Author: Loïc *WydD* Petit
Licence: CC-BY

Sheet: /stars/row6-counter/
File: row6-counter.sch

Title:

Size: A3	Date: 2020-11-26	Rev:
KiCad E.D.A. eeschema 5.1.7-a382d34a887ubuntu18.04.1		Id: 21/69

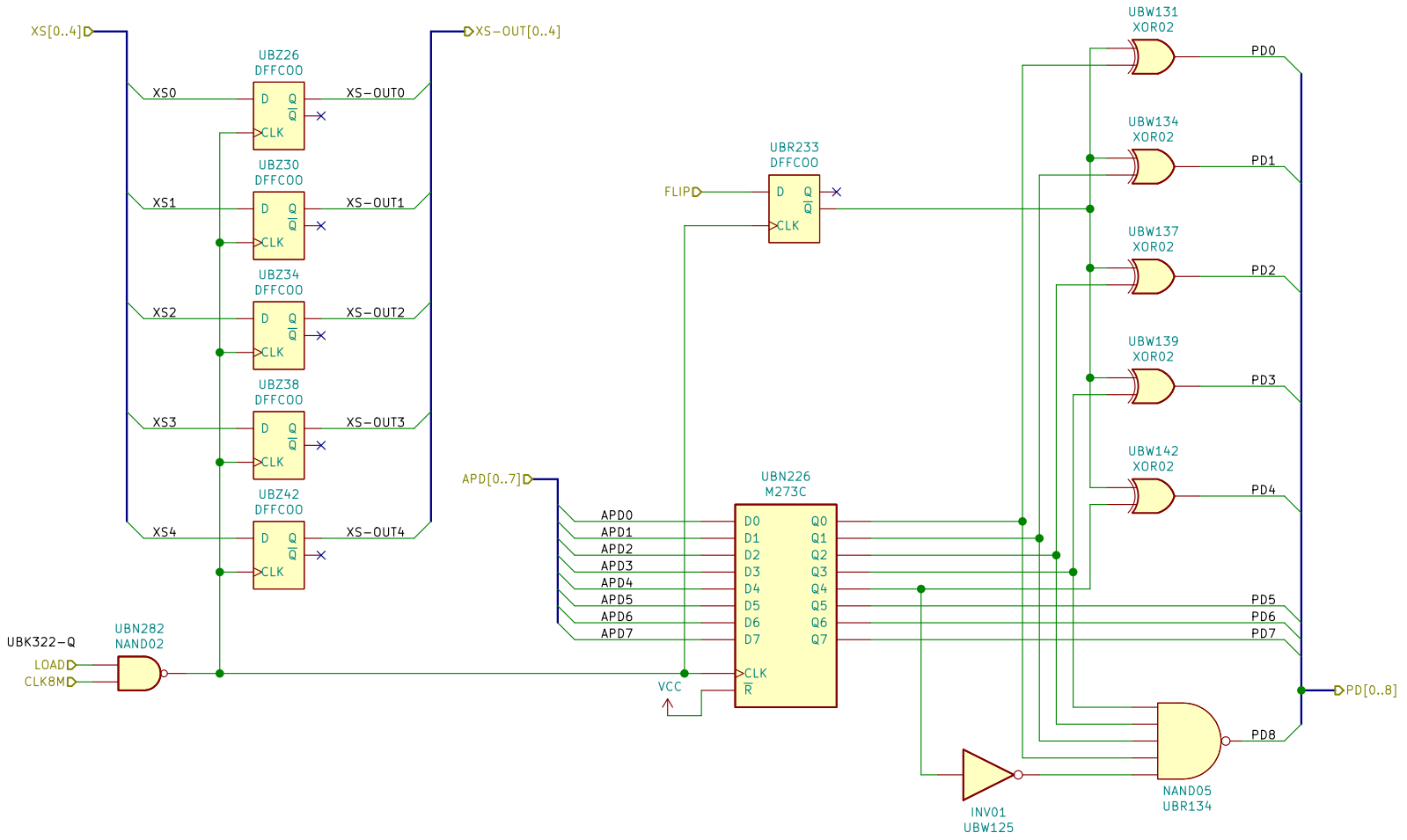

Author: Loïc *WydD* Petit
Licence: CC-BY

Sheet: /stars/xpd-bus5/
File: xpd-bus5.sch

Title:

Size: A4	Date: 2020-11-26	**Rev:**
KiCad E.D.A. eeschema 5.1.7-a382d34a887ubuntu18.04.1		Id: 22/69

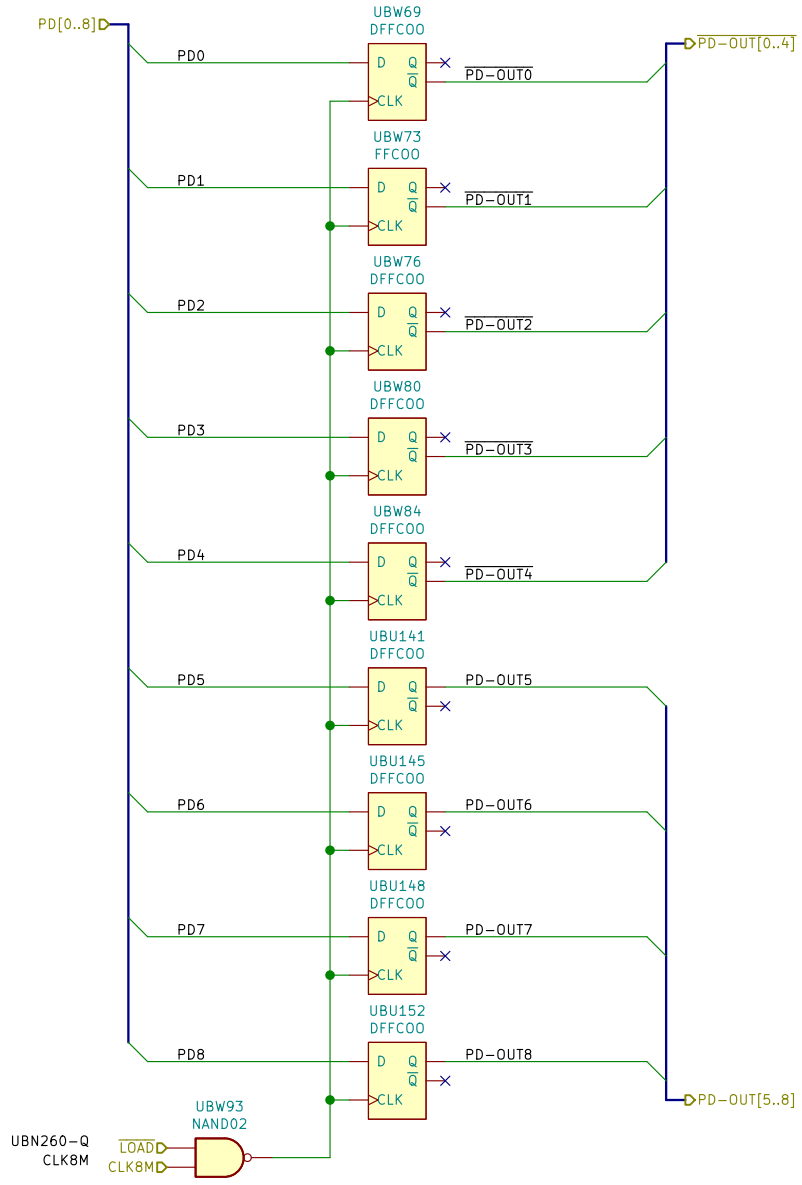

Author: Loïc *WydD* Petit
Licence: CC-BY

Sheet: /stars/xpd-bus5-sync/
File: xpd-bus5-sync.sch

Title:

Size: A4	Date: 2020-11-26	**Rev:**
KiCad E.D.A. eeschema 5.1.7-a382d34a887ubuntu18.04.1		Id: 23/69

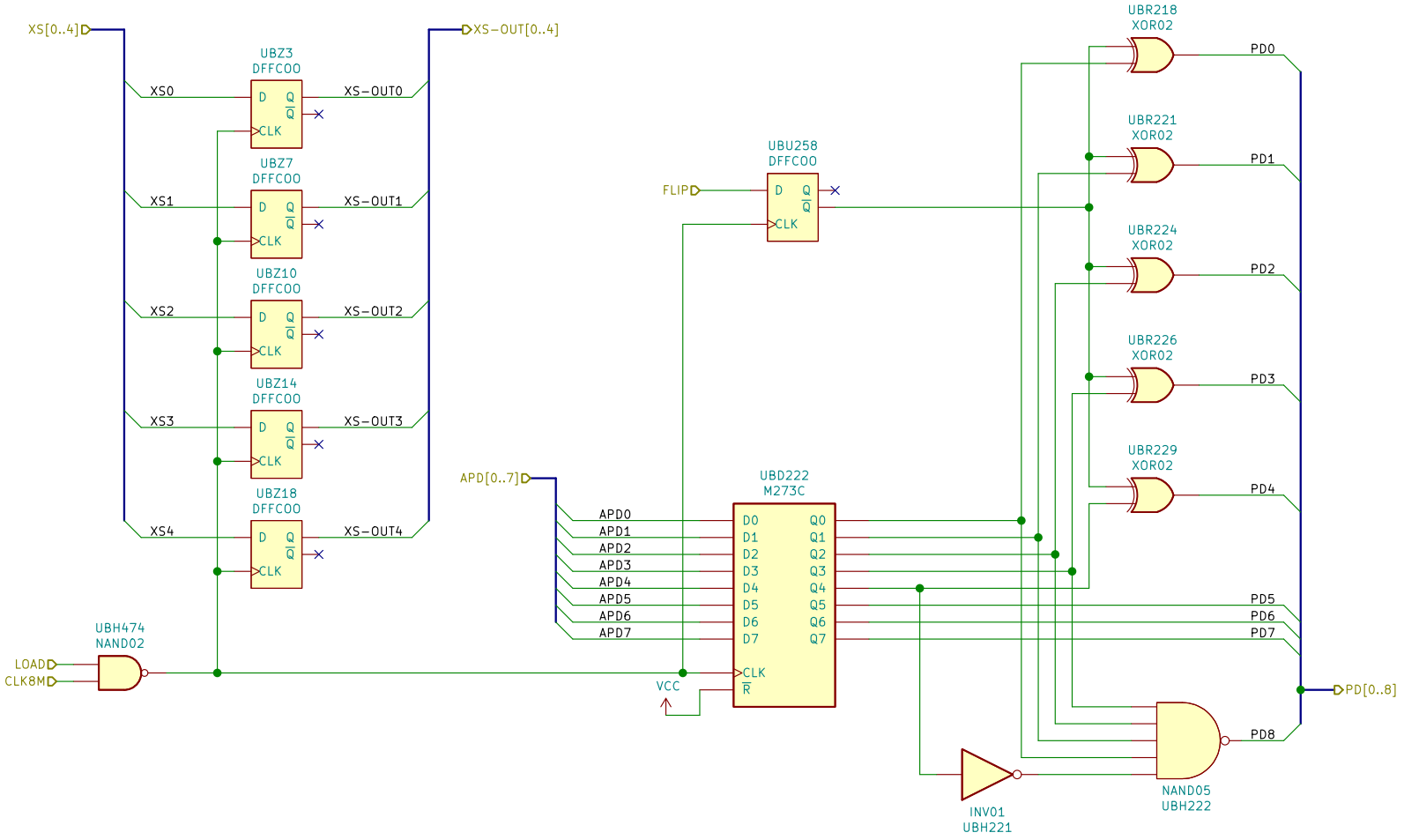

Author: Loïc *WydD* Petit
Licence: CC-BY

Sheet: /stars/xpd-bus6/
File: xpd-bus6.sch

Title:

Size: A4	Date: 2020-11-26	**Rev:**
KiCad E.D.A. eeschema 5.1.7-a382d34a887ubuntu18.04.1		Id: 24/69

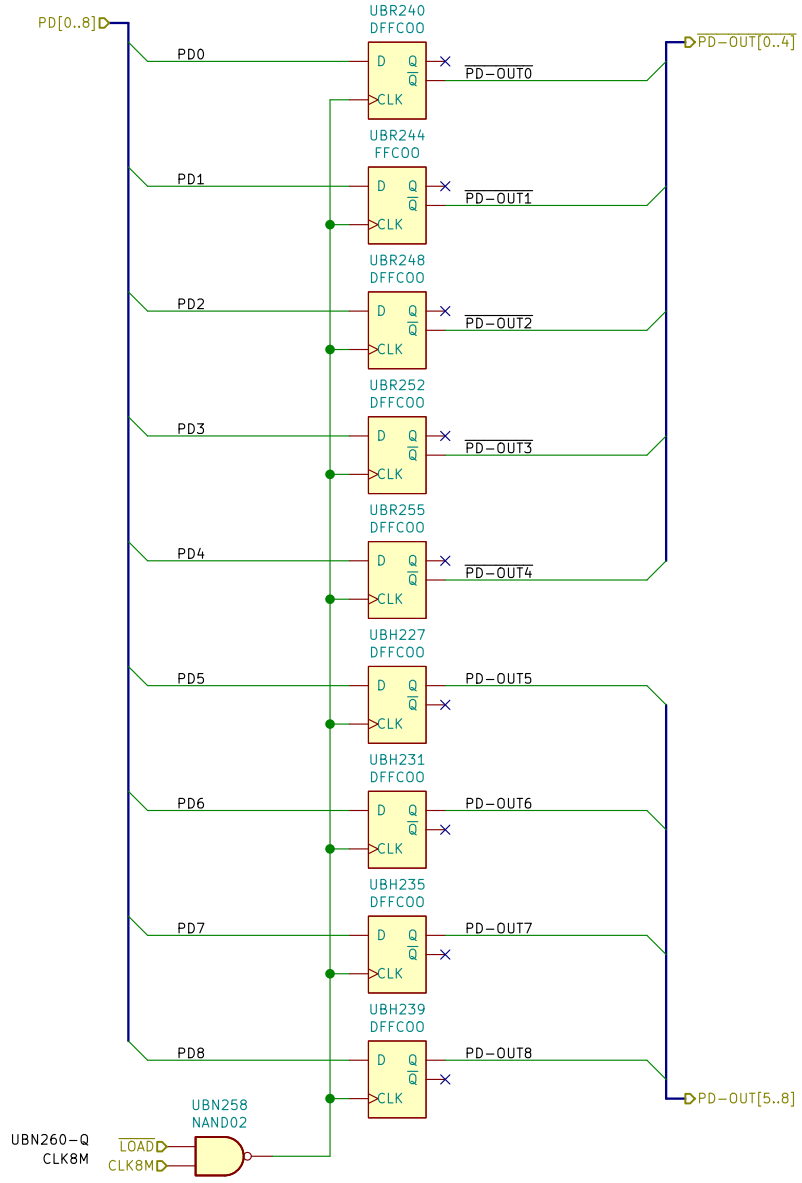

Author: Loïc *WydD* Petit
Licence: CC-BY

Sheet: /stars/xpd-bus6-sync/
File: xpd-bus6-sync.sch

Title:

Size: A4	Date: 2020-11-26	Rev:
KiCad E.D.A. eeschema 5.1.7-a382d34a887ubuntu18.04.1		Id: 25/69

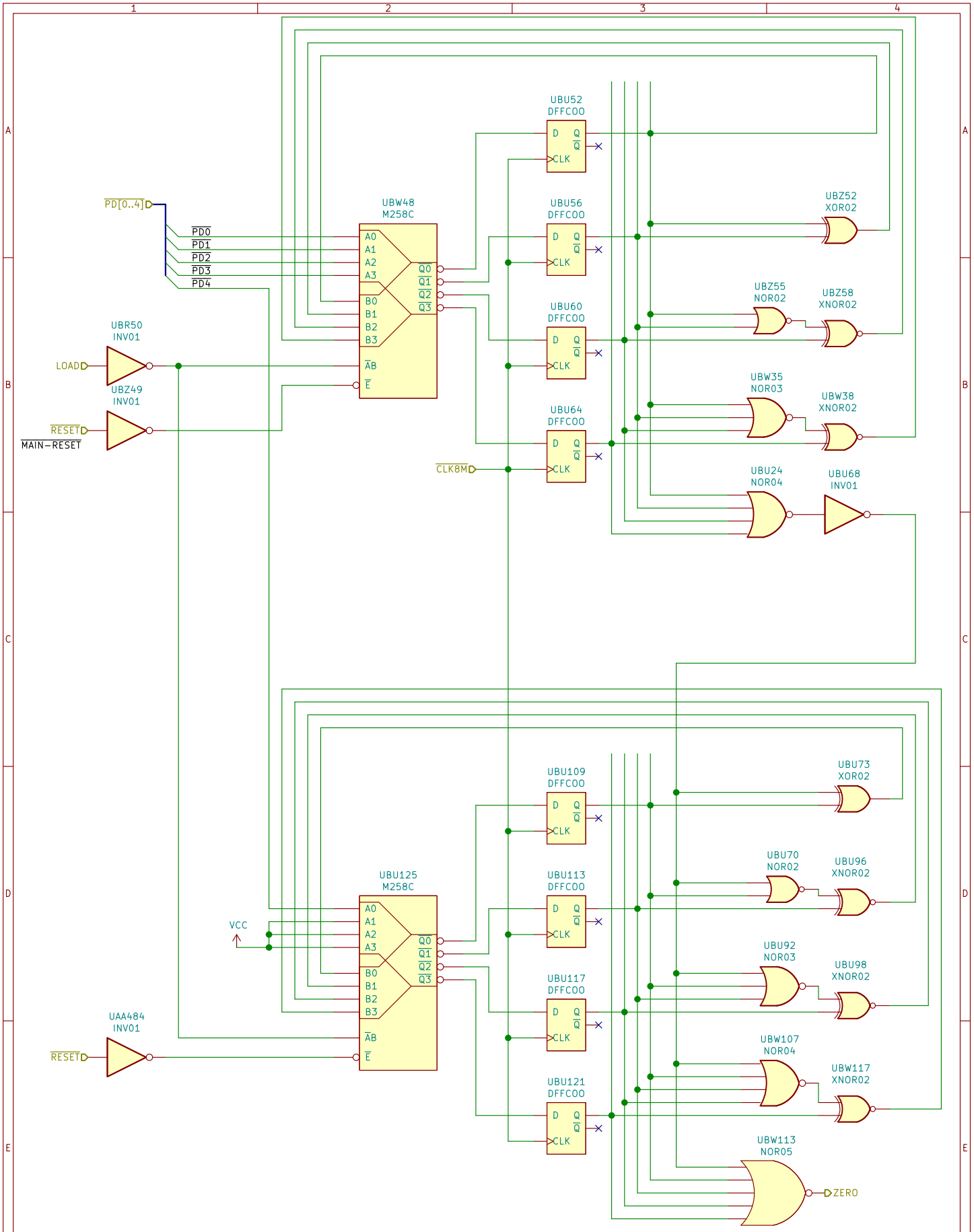

Author: Loïc *WydD* Petit
Licence: CC-BY

Sheet: /stars/xpd5-sync/
File: xpd5-sync.sch

Title:

Size: A4	Date: 2020-11-26	Rev:
KiCad E.D.A. eeschema 5.1.7-a382d34a887ubuntu18.04.1		Id: 26/69

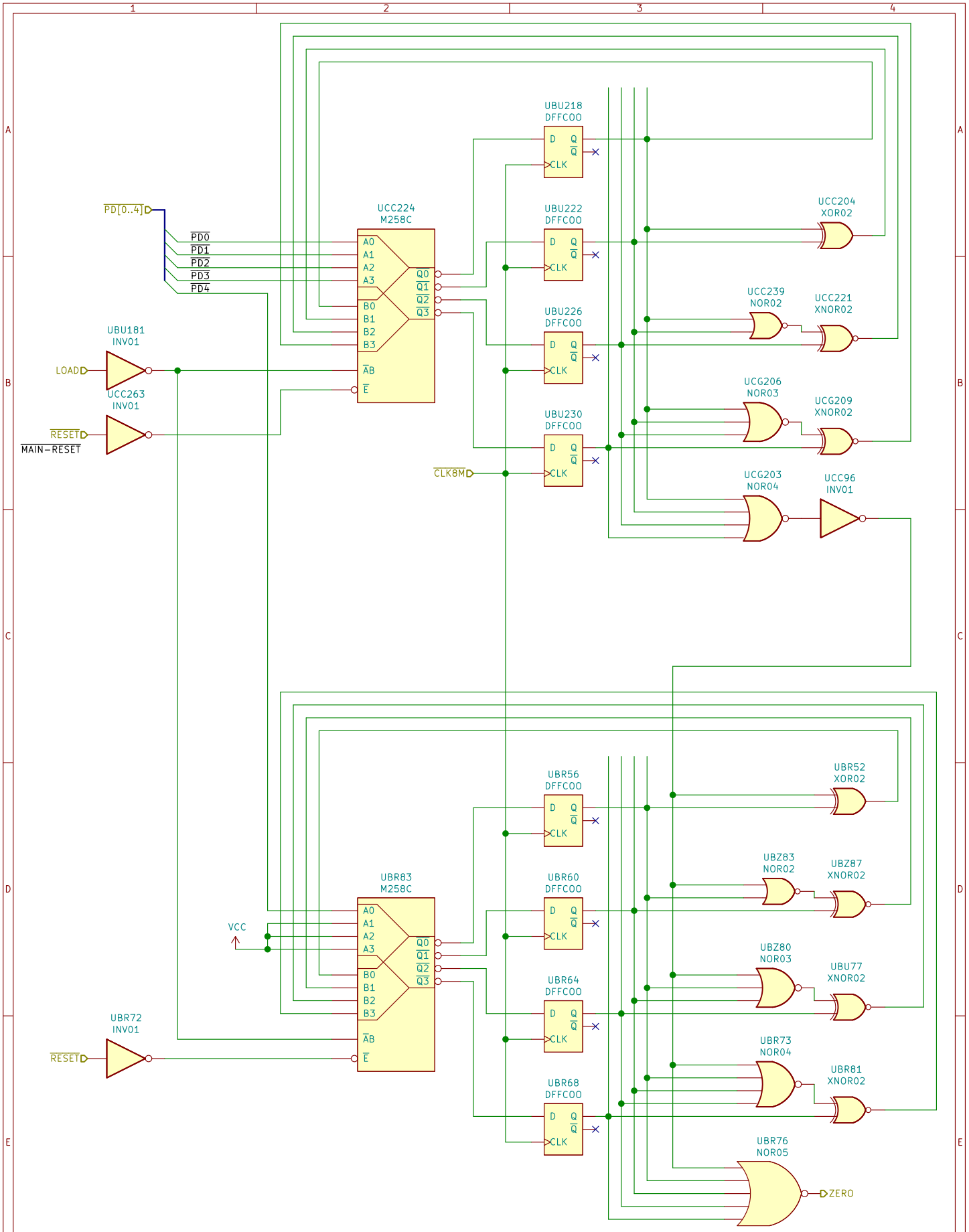

Author: Loïc *WydD* Petit
Licence: CC-BY

Sheet: /stars/xpd6-sync/
File: xpd6-sync.sch

Title:

Size: A4	Date: 2020-11-26	Rev:
KiCad E.D.A. eeschema 5.1.7-a382d34a887ubuntu18.04.1		Id: 27/69

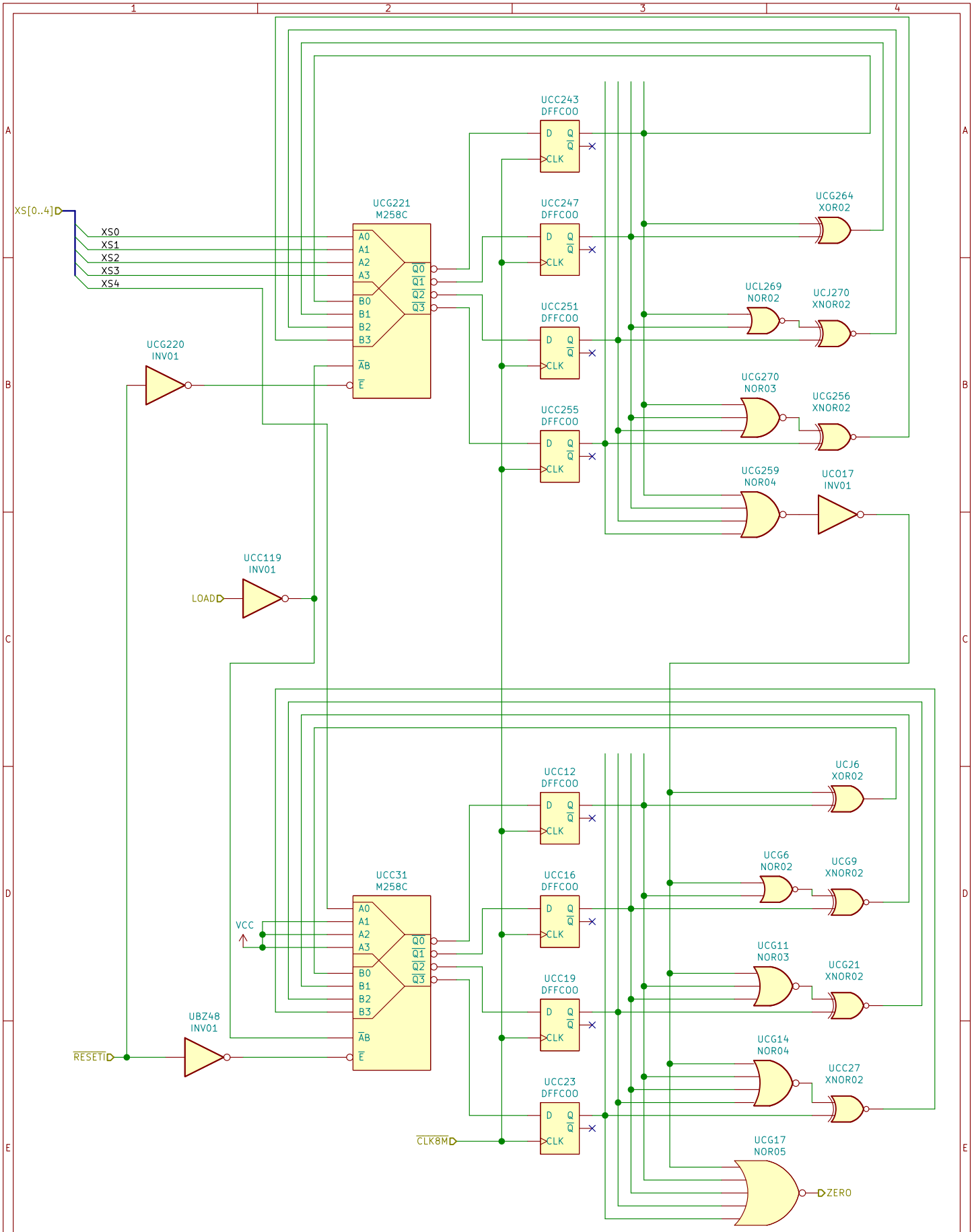

Author: Loïc *WydD* Petit
Licence: CC-BY

Sheet: /stars/counter-xs-1/
File: counter-xs-1.sch

Title:

Size: A4	Date: 2020-11-26	Rev:
KiCad E.D.A. eeschema 5.1.7-a382d34a887ubuntu18.04.1		Id: 28/69

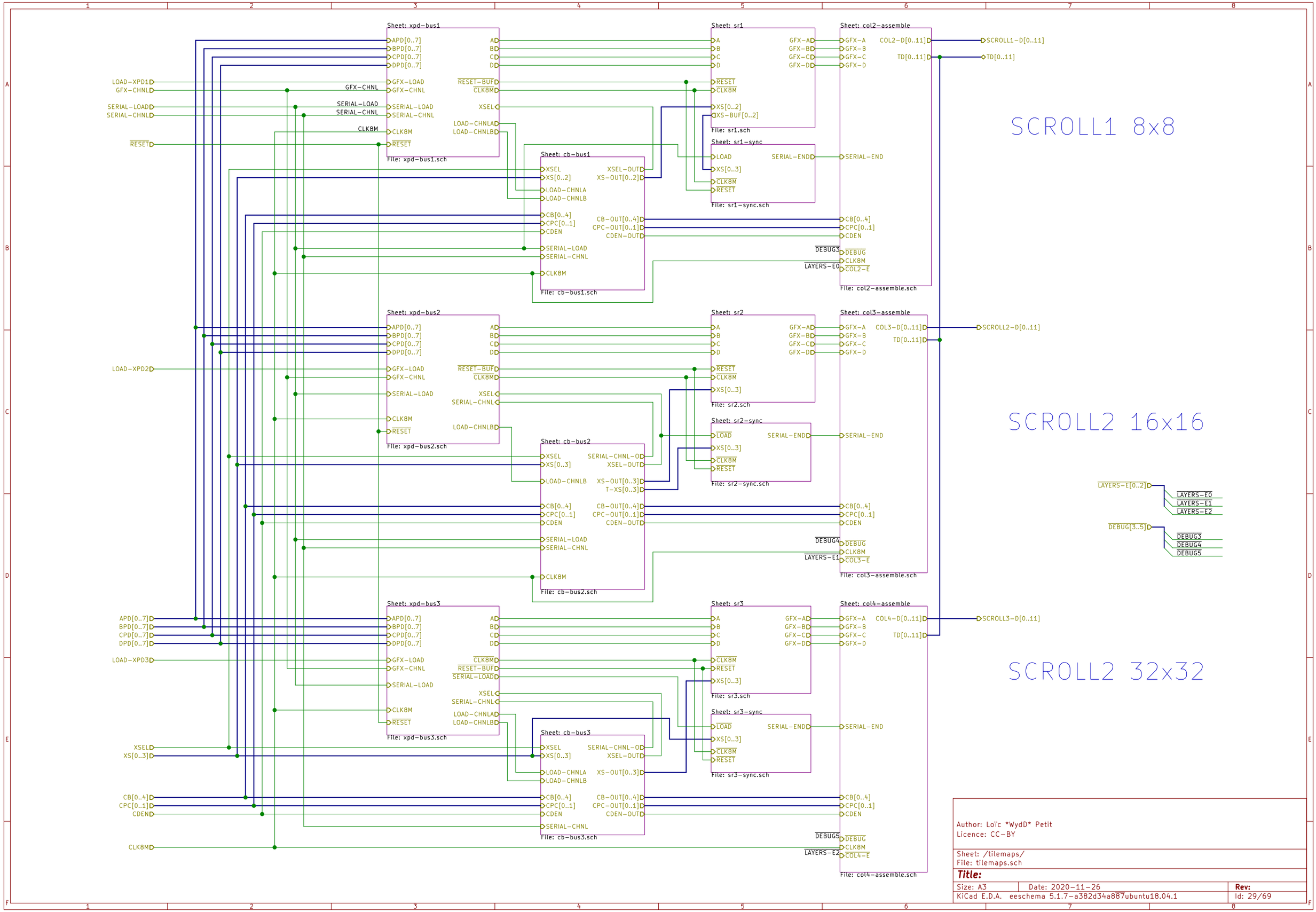
Sheet: xpd-bus1
File: xpd-bus1.sch
Sheet: sr1
File: sr1.sch
Sheet: sr1-sync
File: sr1-sync.sch
Sheet: col2-assemble
File: col2-assemble.sch
Sheet: cb-bus1
File: cb-bus1.sch
SCROLL1 8x8
Sheet: xpd-bus2
File: xpd-bus2.sch
Sheet: sr2
File: sr2.sch
Sheet: sr2-sync
File: sr2-sync.sch
Sheet: col3-assemble
File: col3-assemble.sch
Sheet: cb-bus2
File: cb-bus2.sch
SCROLL2 16x16
Sheet: xpd-bus3
File: xpd-bus3.sch
Sheet: sr3
File: sr3.sch
Sheet: sr3-sync
File: sr3-sync.sch
Sheet: col4-assemble
File: col4-assemble.sch
Sheet: cb-bus3
File: cb-bus3.sch
SCROLL2 32x32
LAYERS-E[0..2]
LAYERS-E0
LAYERS-E1
LAYERS-E2
DEBUG[3..5]
DEBUG3
DEBUG4
DEBUG5
Author: Loïc *WydD* Petit
Licence: CC-BY
Sheet: /tilemaps/
File: tilemaps.sch
Title:
Size: A3
Date: 2020-11-26
Rev:
KiCad E.D.A. eeschema 5.1.7-a382d34a887ubuntu18.04.1
Id: 29/69

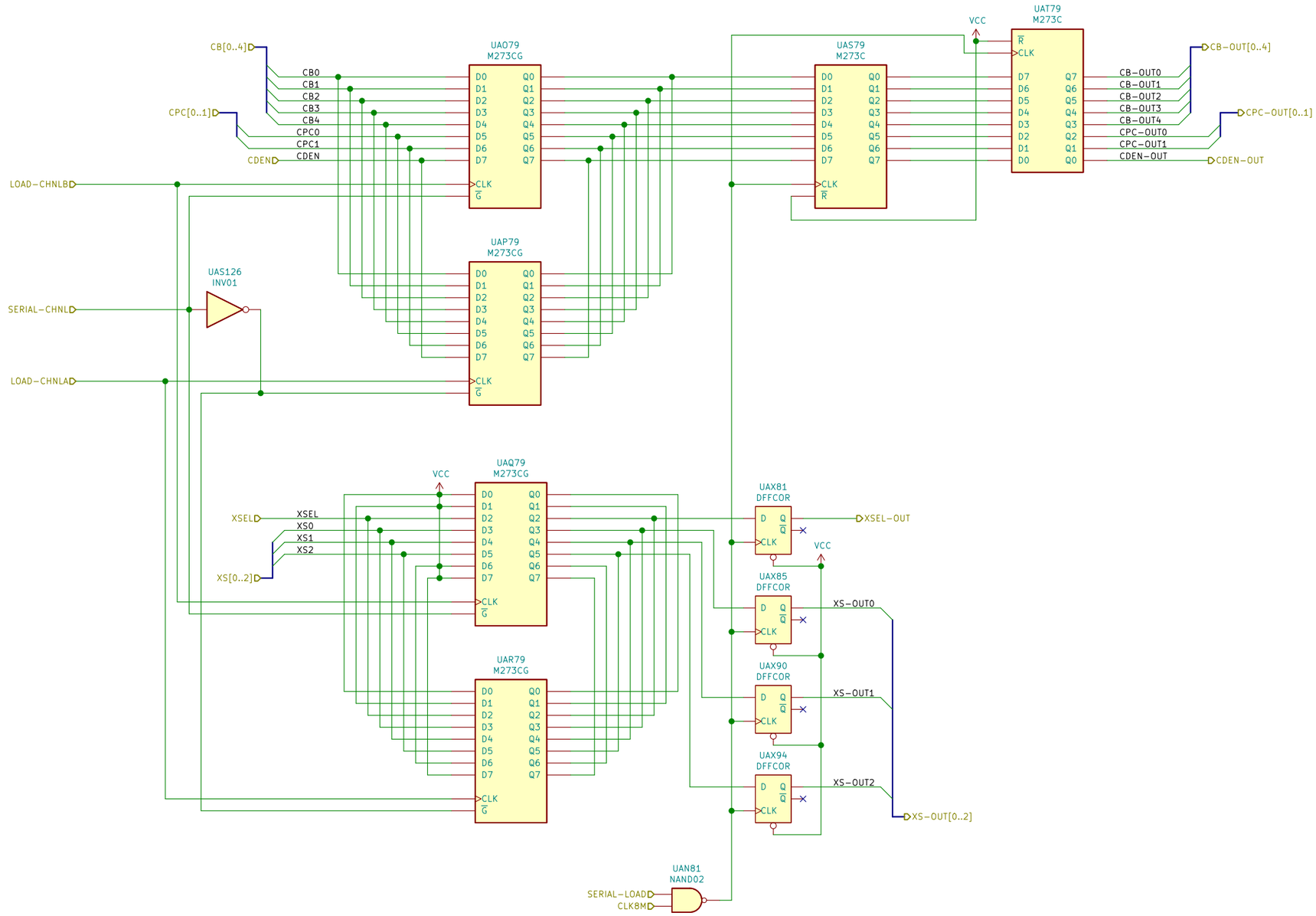

Author: Loïc *WydD* Petit
Licence: CC-BY

Sheet: /tilemaps/cb-bus1/
File: cb-bus1.sch

Title:

Size: A3	Date: 2020-11-26	Rev:
KiCad E.D.A. eeschema 5.1.7-a382d34a887ubuntu18.04.1		Id: 30/69

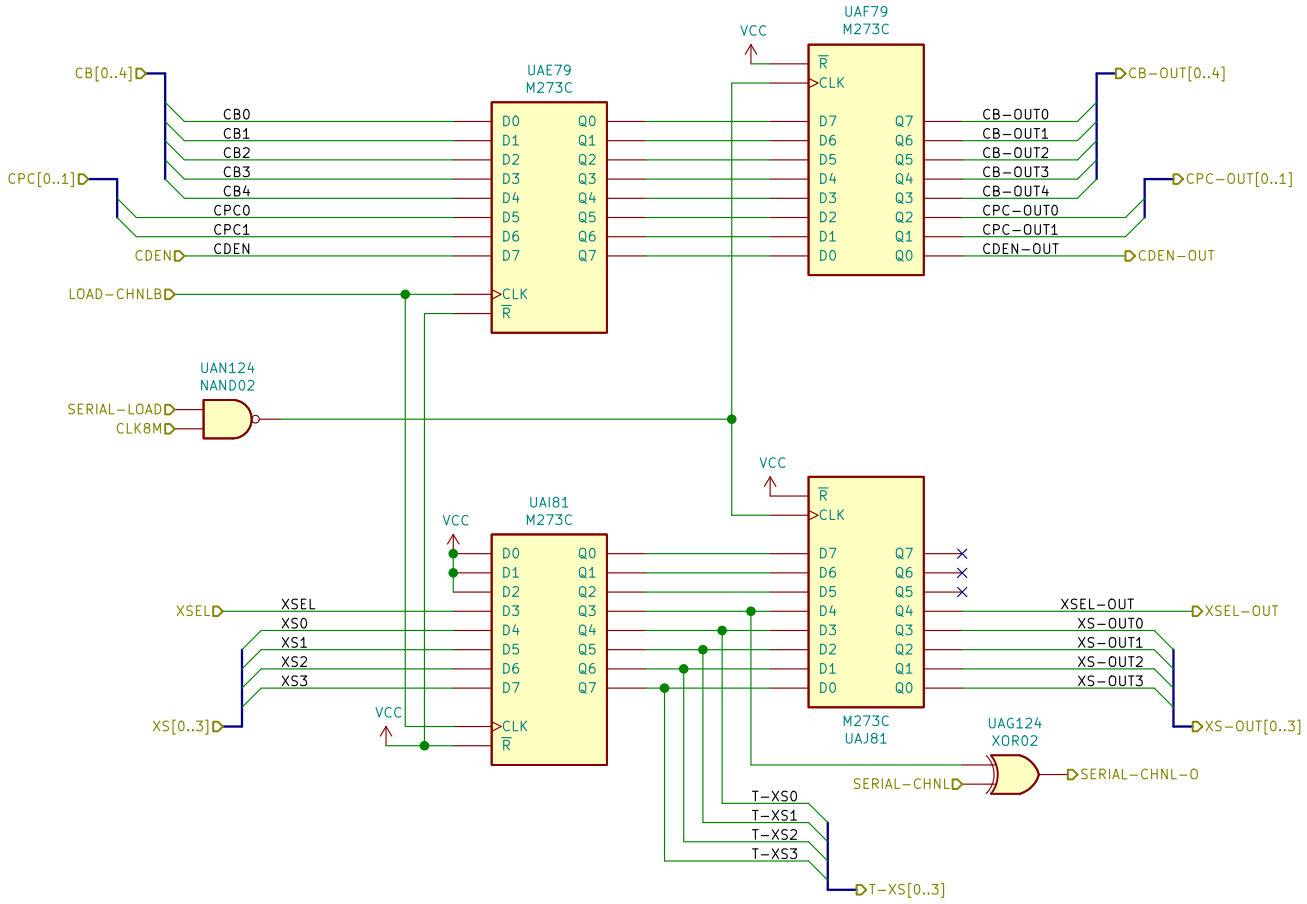

Author: Loïc *WydD* Petit
Licence: CC-BY

Sheet: /tilemaps/cb-bus2/
File: cb-bus2.sch

Title:

Size: A4	Date: 2020-11-26	Rev:
KiCad E.D.A. eeschema 5.1.7-a382d34a887ubuntu18.04.1		Id: 31/69

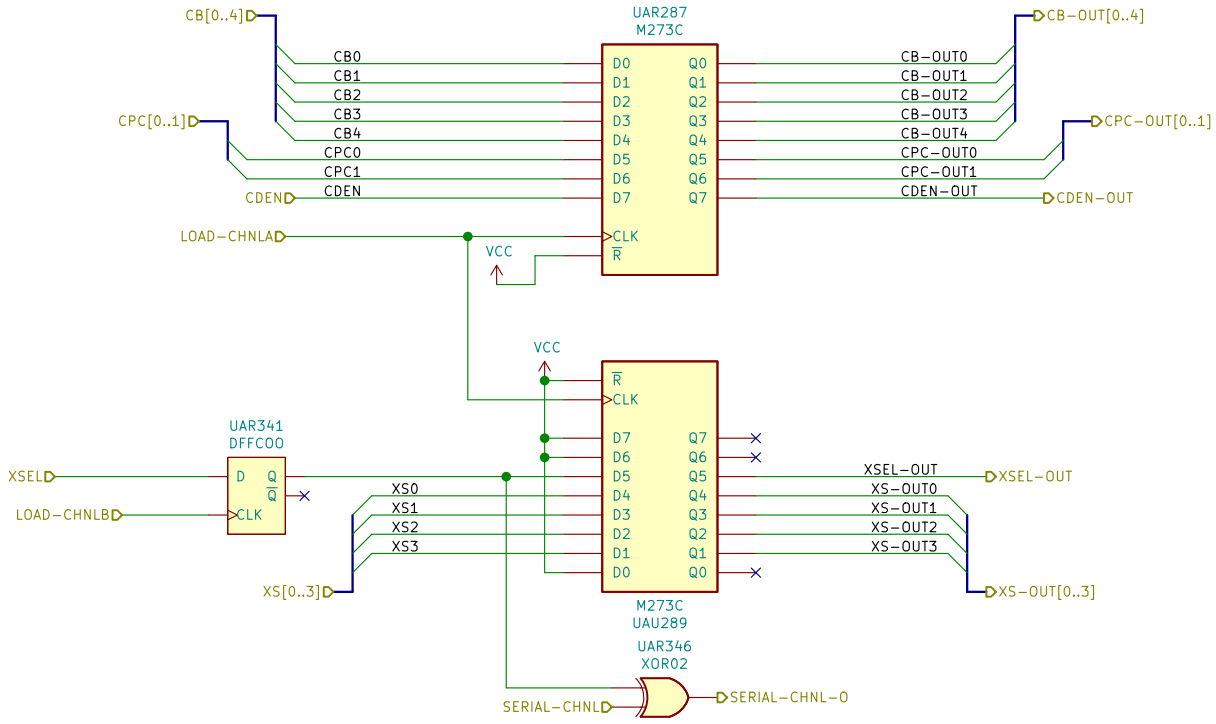

Author: Loïc *WydD* Petit
Licence: CC-BY

Sheet: /tilemaps/cb-bus3/
File: cb-bus3.sch

Title:

Size: A4	Date: 2020-11-26	Rev:
KiCad E.D.A. eeschema 5.1.7-a382d34a887ubuntu18.04.1		Id: 32/69

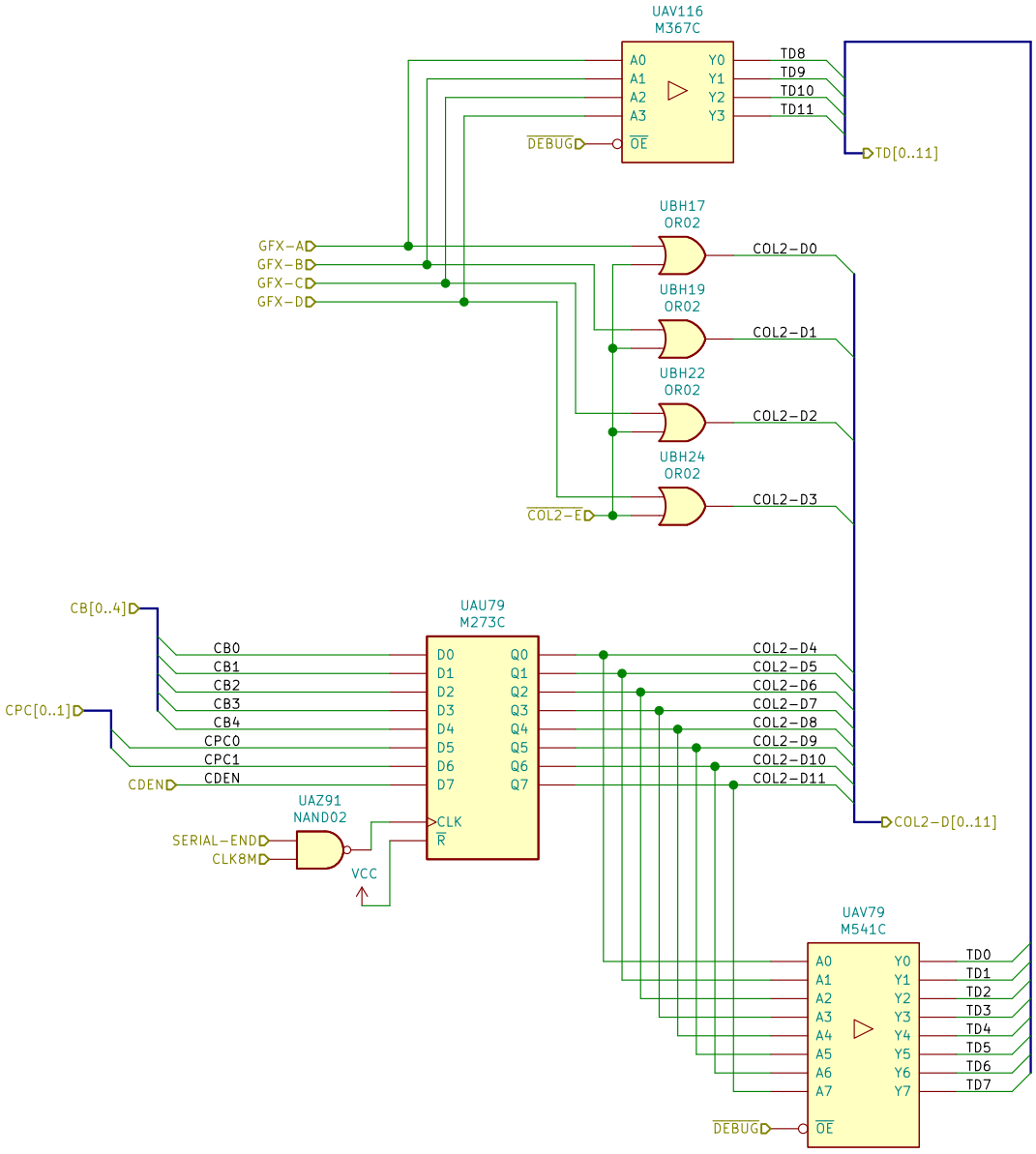

Author: Loïc *WydD* Petit
Licence: CC-BY

Sheet: /tilemaps/col2-assemble/
File: col2-assemble.sch

Title:

Size: A4	Date: 2020-11-26	Rev:
KiCad E.D.A. eeschema 5.1.7-a382d34a887ubuntu18.04.1		Id: 33/69

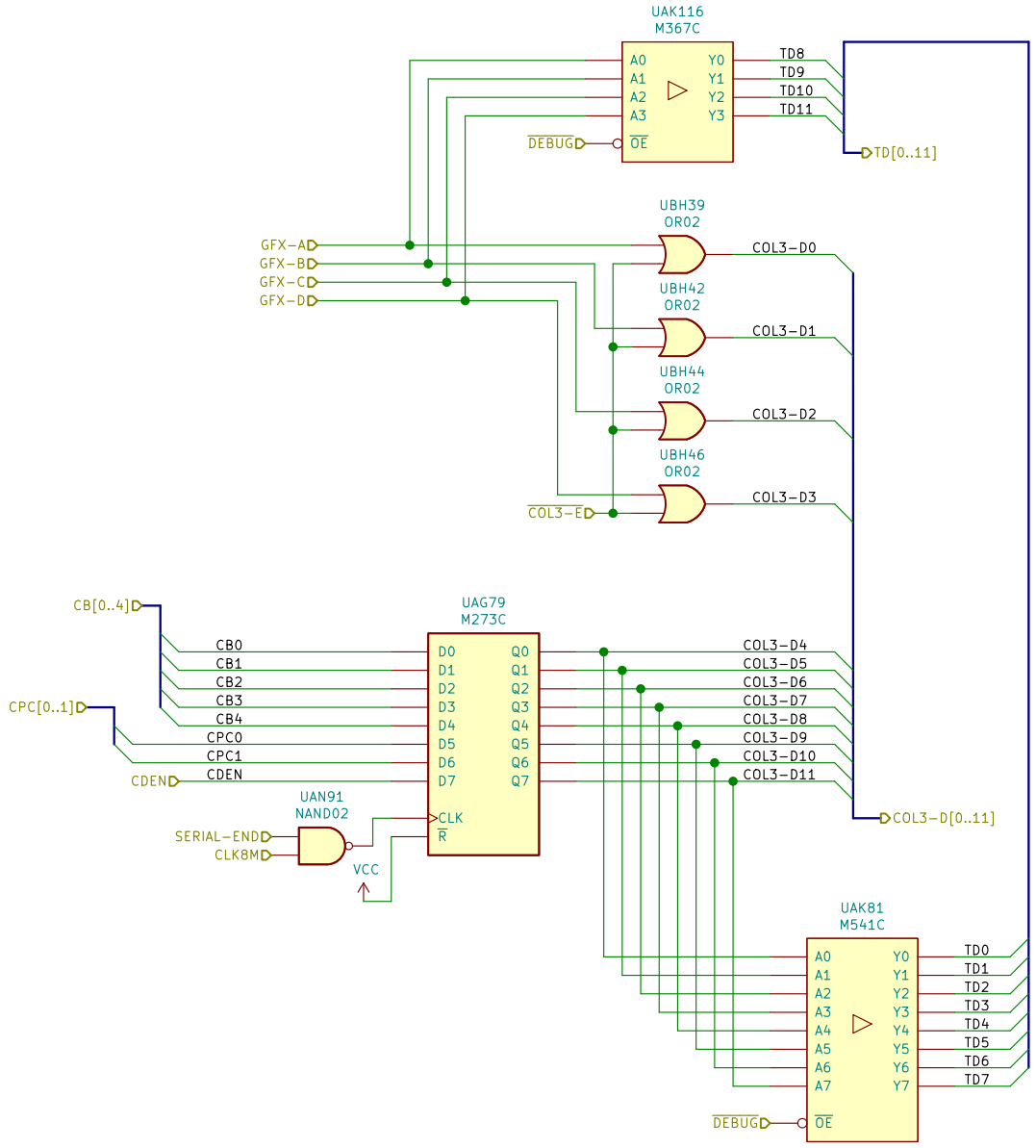

Author: Loïc *WydD* Petit
Licence: CC-BY

Sheet: /tilemaps/col3-assemble/
File: col3-assemble.sch

Title:

Size: A4	Date: 2020-11-26	Rev:
KiCad E.D.A. eeschema 5.1.7-a382d34a887ubuntu18.04.1		Id: 34/69

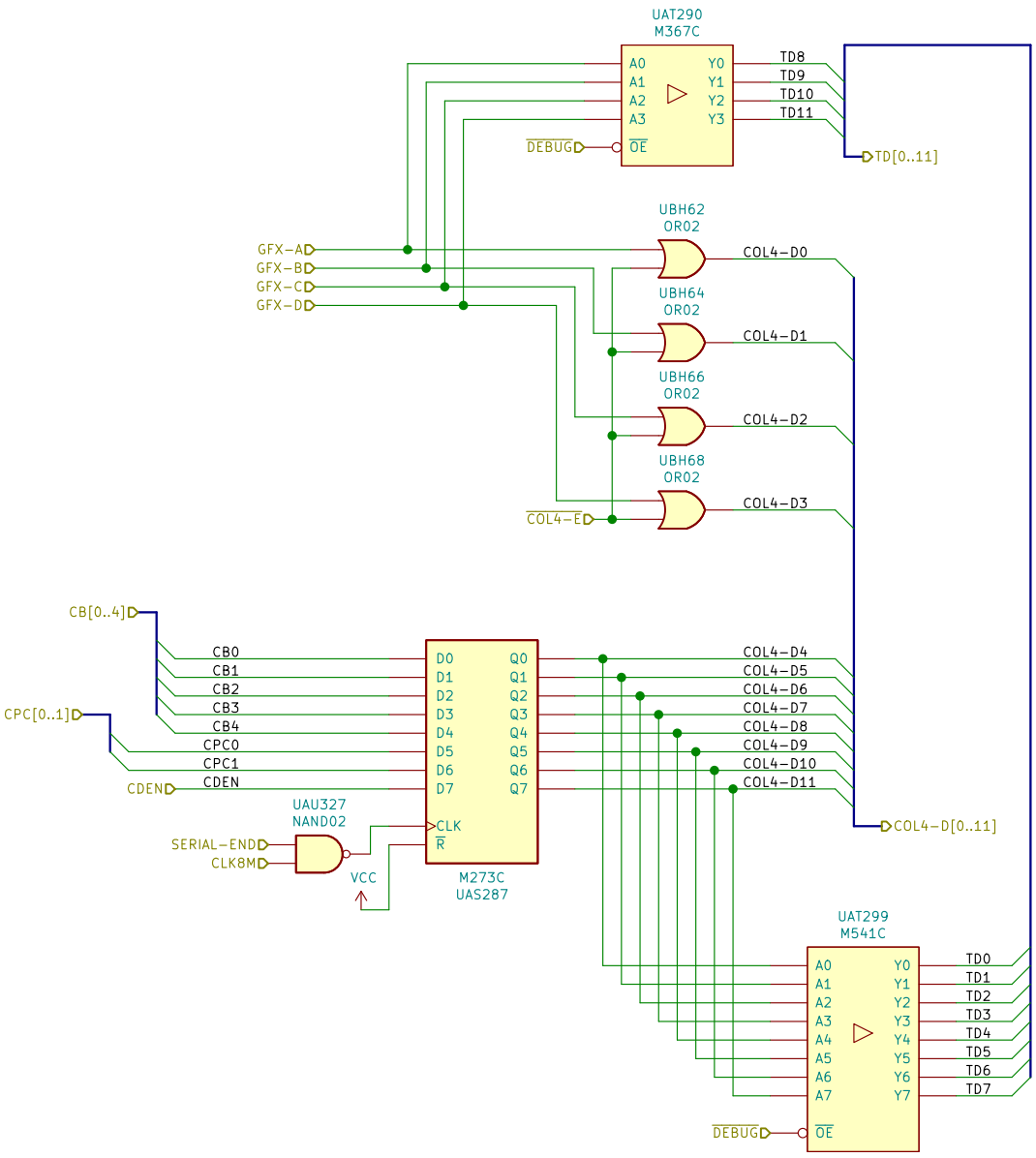

Author: Loïc *WydD* Petit
Licence: CC-BY

Sheet: /tilemaps/col4-assemble/
File: col4-assemble.sch

Title:

Size: A4	Date: 2020-11-26	Rev:
KiCad E.D.A. eeschema 5.1.7-a382d34a887ubuntu18.04.1		Id: 35/69

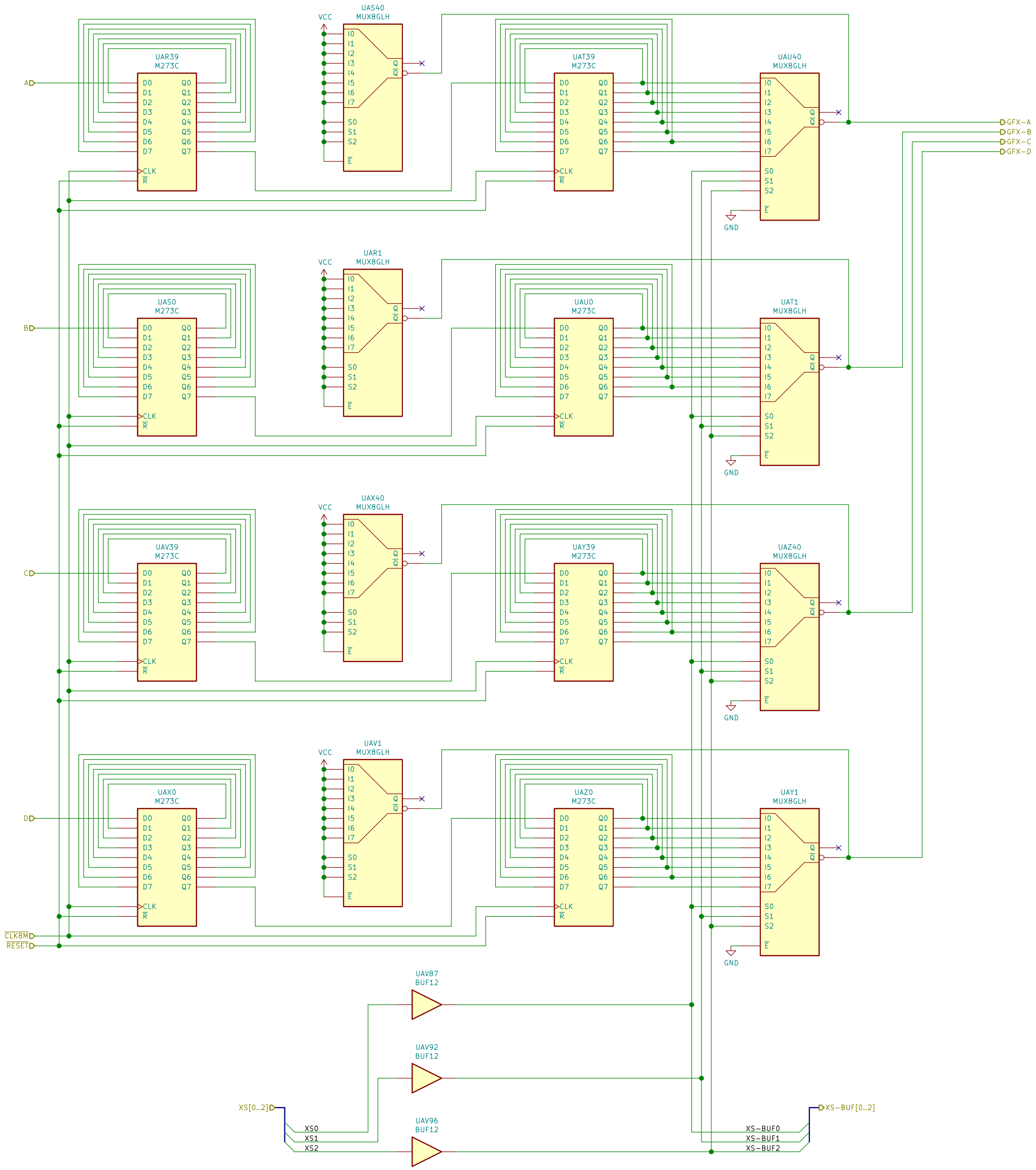

Author: Loïc *WydD* Petit
Licence: CC-BY

Sheet: /tilemaps/sr1/
File: sr1.sch

Title:

Size: A3	Date: 2020-11-26	Rev:
KiCad E.D.A. eeschema 5.1.7-a382d34a887ubuntu18.04.1		Id: 36/69

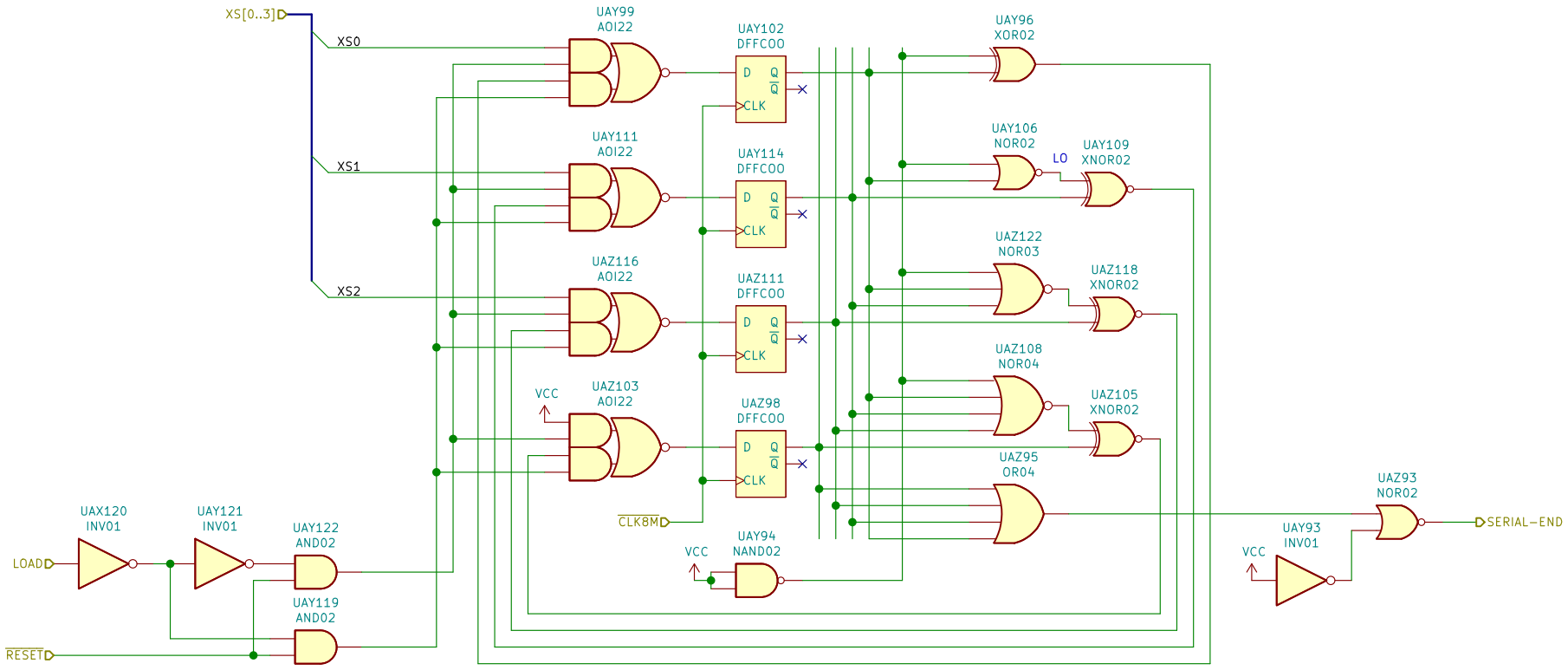

Author: Loïc *WydD* Petit
Licence: CC-BY

Sheet: /tilemaps/sr1-sync/
File: sr1-sync.sch

Title:

Size: A4	Date: 2020-11-26	**Rev:**
KiCad E.D.A. eeschema 5.1.7-a382d34a887ubuntu18.04.1		Id: 37/69

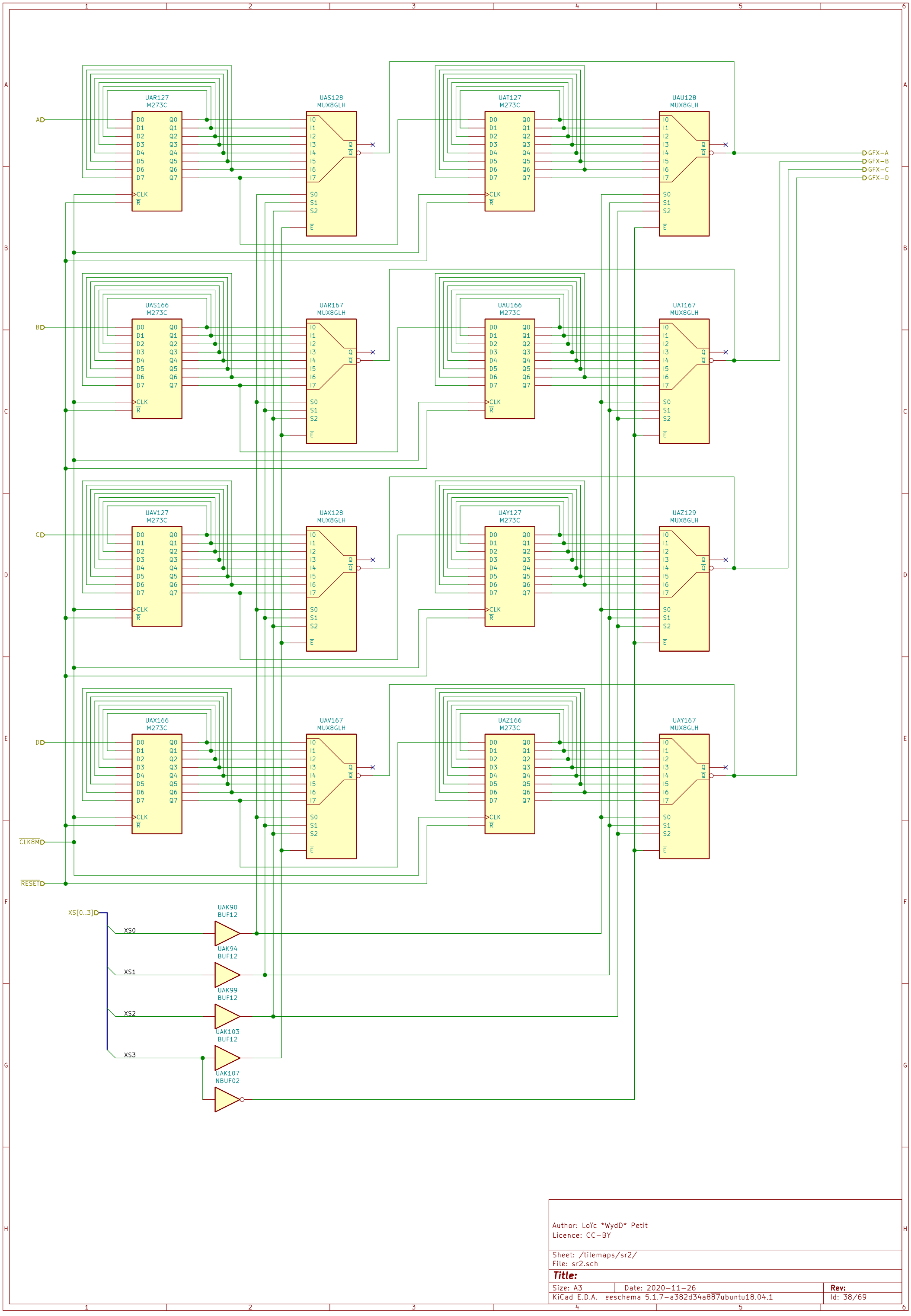

Author: Loïc *WydD* Petit
Licence: CC-BY

Sheet: /tilemaps/sr2/
File: sr2.sch

Title:

Size: A3	Date: 2020-11-26	Rev:
KiCad E.D.A. eeschema 5.1.7-a382d34a887ubuntu18.04.1		Id: 38/69

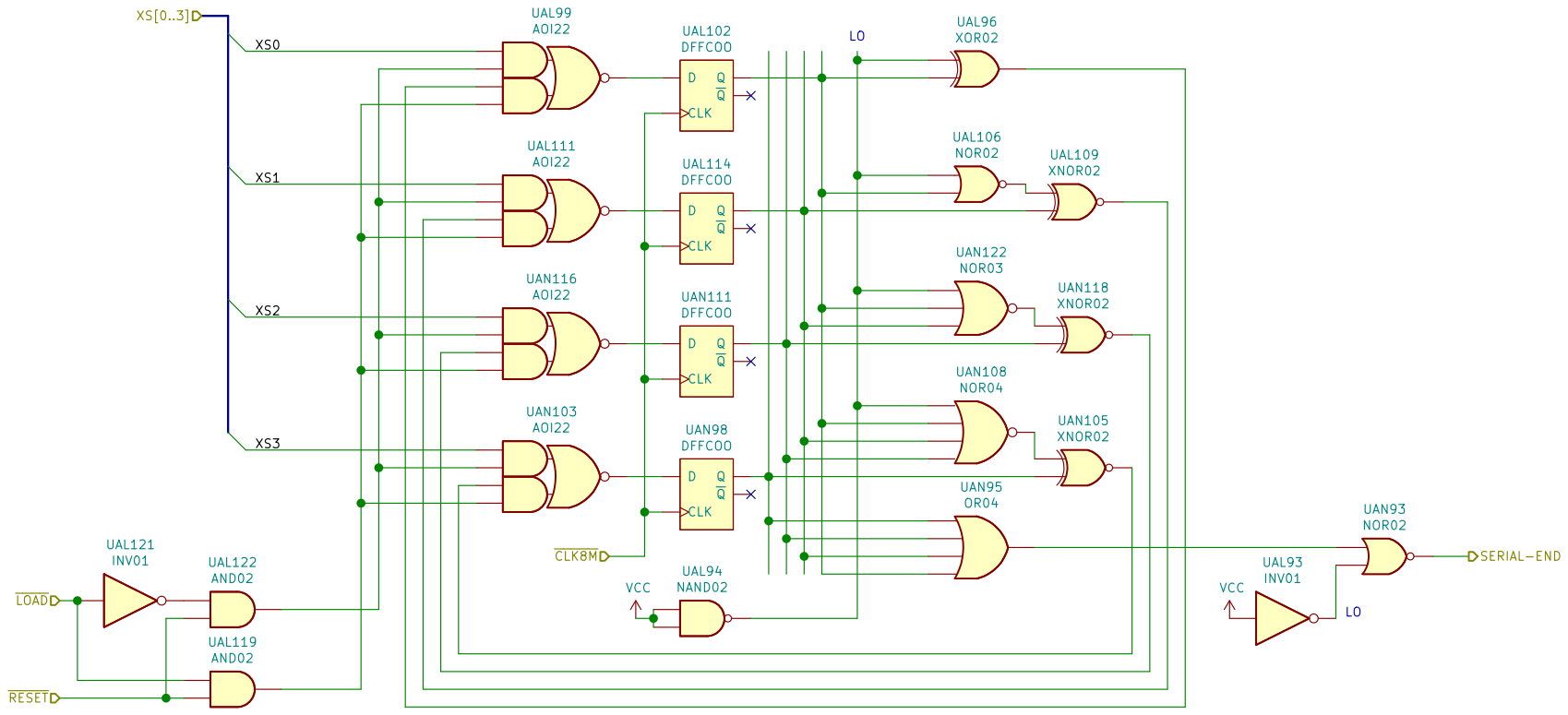

Author: Loïc *WydD* Petit
Licence: CC-BY

Sheet: /tilemaps/sr2-sync/
File: sr2-sync.sch

Title:

Size: A4	Date: 2020-11-26	Rev:
KiCad E.D.A. eeschema 5.1.7-a382d34a887ubuntu18.04.1		Id: 39/69

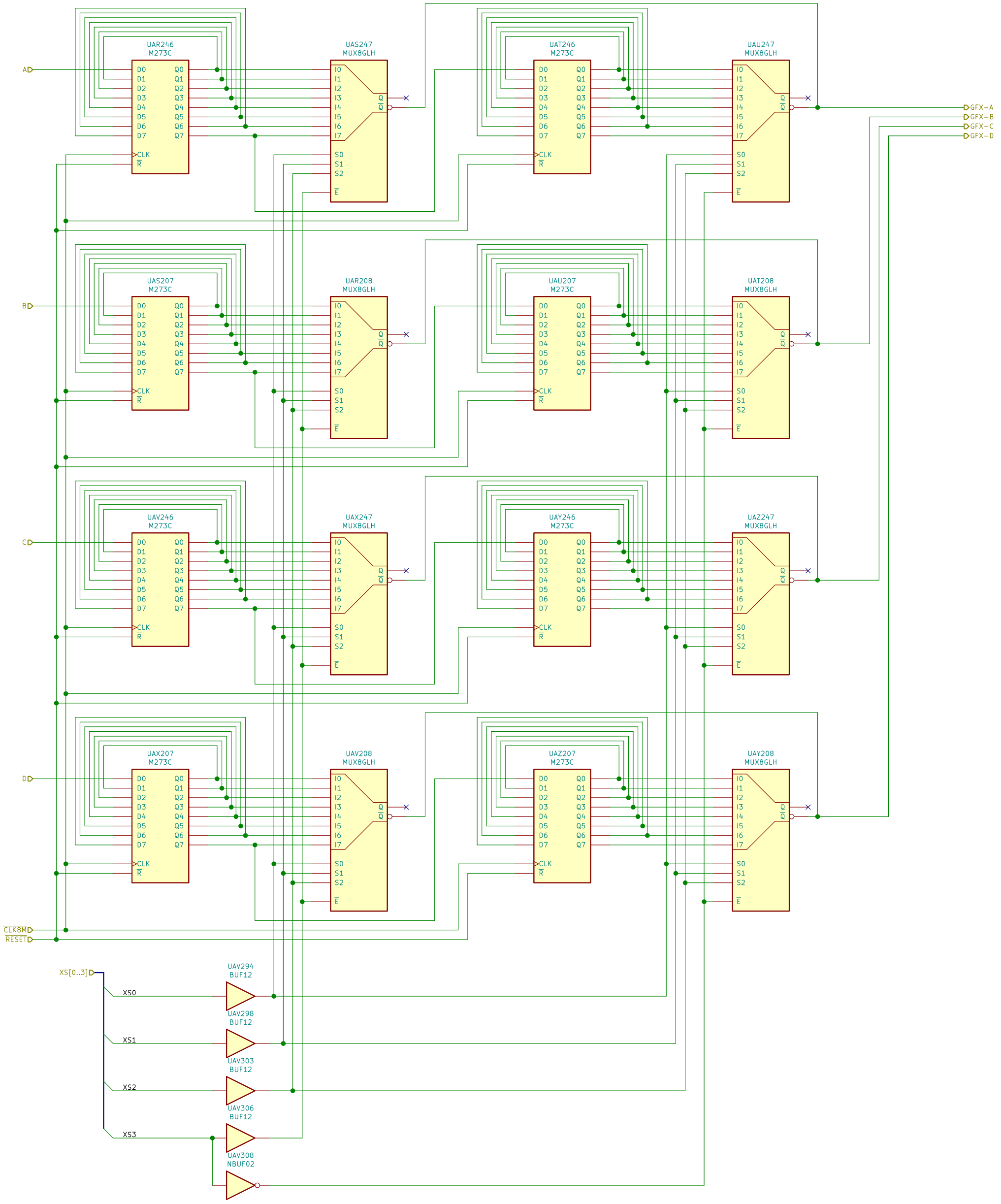

Author: Loïc *WydD* Petit
Licence: CC-BY

Sheet: /tilemaps/sr3/
File: sr3.sch

Title:

Size: A3	Date: 2020-11-26	Rev:
KiCad E.D.A. eeschema 5.1.7-a382d34a887ubuntu18.04.1		Id: 40/69

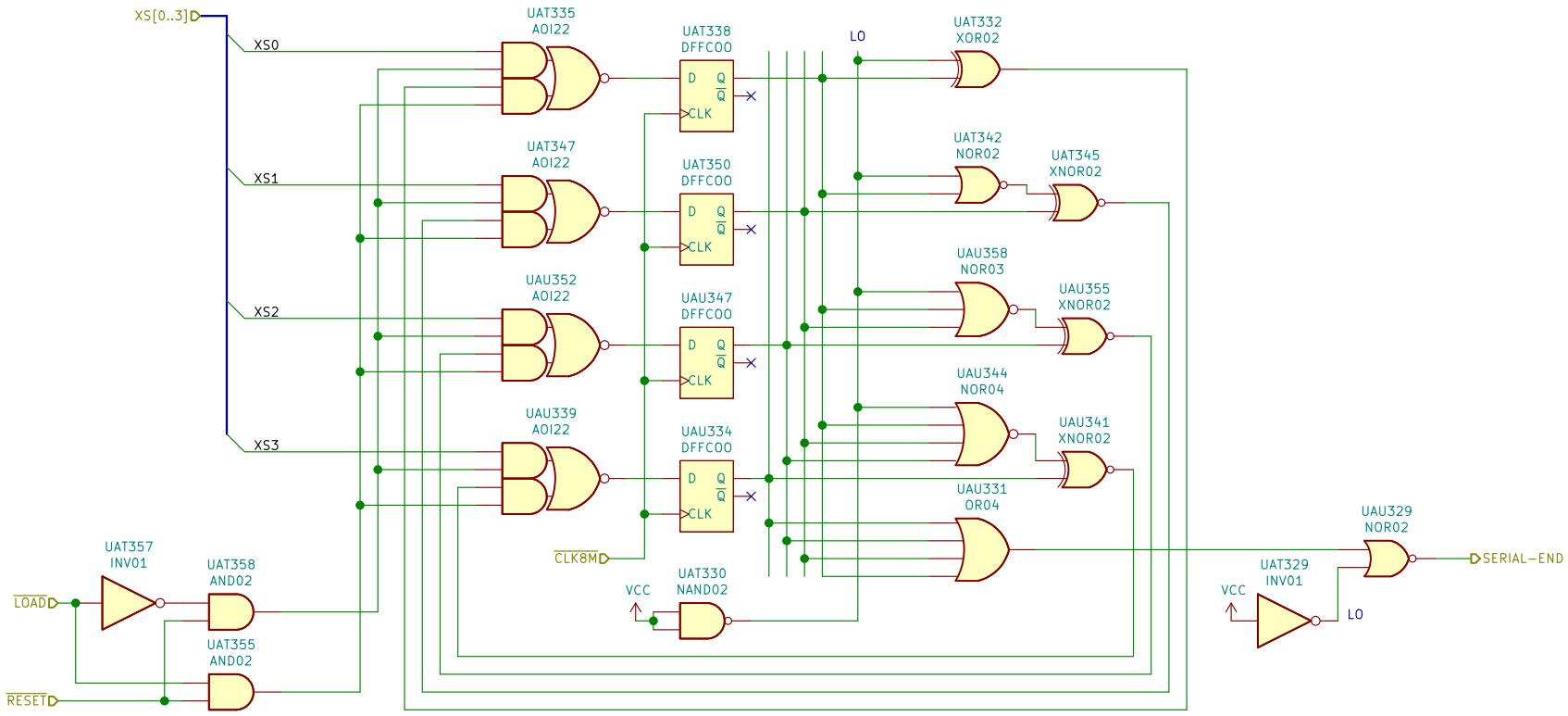

Author: Loïc *WydD* Petit
Licence: CC-BY

Sheet: /tilemaps/sr3-sync/
File: sr3-sync.sch

Title:

Size: A4	Date: 2020-11-26	**Rev:**
KiCad E.D.A. eeschema 5.1.7-a382d34a887ubuntu18.04.1		Id: 41/69

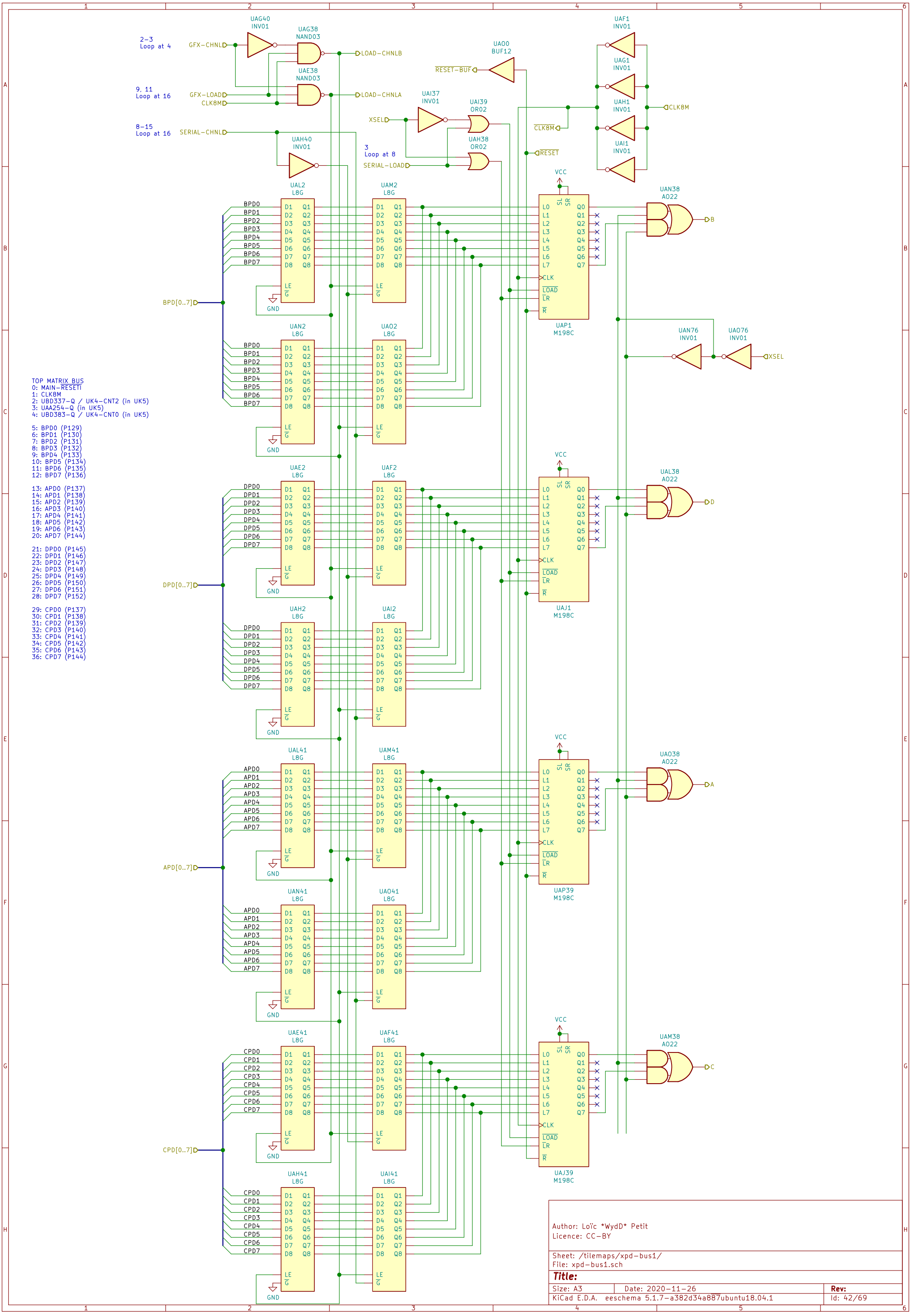
2-3
Loop at 4
GFX-CHNL
UAG40
INV01
UAG38
NAND03
LOAD-CHNLB
9, 11
Loop at 16
GFX-LOAD
CLK8M
UAE38
NAND03
LOAD-CHNLA
8-15
Loop at 16
SERIAL-CHNL
UAH40
INV01
XSEL
UAI37
INV01
UAI39
OR02
UAH38
OR02
3
Loop at 8
SERIAL-LOAD
RESET-BUF
UA00
BUF12
CLK8M
RESET
UAF1
INV01
UAG1
INV01
UAH1
INV01
UAI1
INV01
CLK8M
VCC
UAN38
AO22
B
UAL2
L8G
UAM2
L8G
BPD0
BPD1
BPD2
BPD3
BPD4
BPD5
BPD6
BPD7
BPD[0..7]
GND
UAP1
M198C
UAN76
INV01
UAO76
INV01
XSEL
UAN2
L8G
UAO2
L8G
UAE2
L8G
UAF2
L8G
DPD0
DPD1
DPD2
DPD3
DPD4
DPD5
DPD6
DPD7
DPD[0..7]
UAL38
AO22
D
UAJ1
M198C
UAH2
L8G
UAI2
L8G
UAL41
L8G
UAM41
L8G
APD0
APD1
APD2
APD3
APD4
APD5
APD6
APD7
APD[0..7]
UAO38
AO22
A
UAP39
M198C
UAN41
L8G
UAO41
L8G
UAE41
L8G
UAF41
L8G
CPD0
CPD1
CPD2
CPD3
CPD4
CPD5
CPD6
CPD7
CPD[0..7]
UAM38
AO22
C
UAJ39
M198C
UAH41
L8G
UAI41
L8G
TOP MATRIX BUS
0: MAIN-RESETI
1: CLK8M
2: UBD337-Q / UK4-CNT2 (in UK5)
3: UAA254-Q (in UK5)
4: UBD383-Q / UK4-CNT0 (in UK5)
5: BPD0 (P129)
6: BPD1 (P130)
7: BPD2 (P131)
8: BPD3 (P132)
9: BPD4 (P133)
10: BPD5 (P134)
11: BPD6 (P135)
12: BPD7 (P136)
13: APD0 (P137)
14: APD1 (P138)
15: APD2 (P139)
16: APD3 (P140)
17: APD4 (P141)
18: APD5 (P142)
19: APD6 (P143)
20: APD7 (P144)
21: DPD0 (P145)
22: DPD1 (P146)
23: DPD2 (P147)
24: DPD3 (P148)
25: DPD4 (P149)
26: DPD5 (P150)
27: DPD6 (P151)
28: DPD7 (P152)
29: CPD0 (P137)
30: CPD1 (P138)
31: CPD2 (P139)
32: CPD3 (P140)
33: CPD4 (P141)
34: CPD5 (P142)
35: CPD6 (P143)
36: CPD7 (P144)
Author: Loïc *WydD* Petit
Licence: CC-BY
Sheet: /tilemaps/xpd-bus1/
File: xpd-bus1.sch
Title:
Size: A3
Date: 2020-11-26
Rev:
KiCad E.D.A. eeschema 5.1.7-a382d34a887ubuntu18.04.1
Id: 42/69

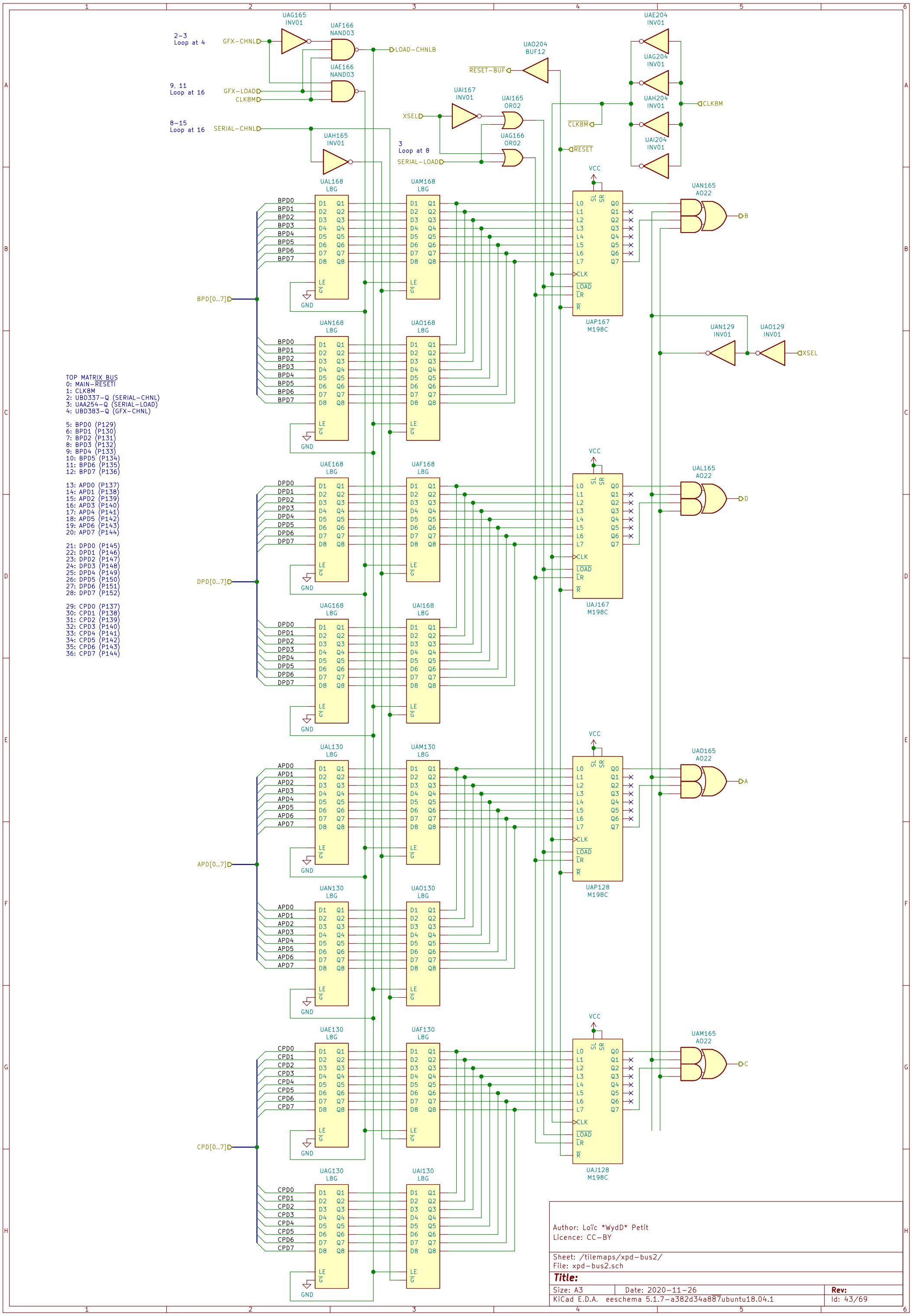
2-3
Loop at 4
GFX-CHNL
UAG165
INV01
UAF166
NAND03
LOAD-CHNLB
9, 11
Loop at 16
GFX-LOAD
CLK8M
UAE166
NAND03
8-15
Loop at 16
SERIAL-CHNL
UAH165
INV01
UAO204
BUF12
RESET-BUF
UAI167
INV01
XSEL
UAI165
OR02
UAG166
OR02
3
Loop at 8
SERIAL-LOAD
CLK8M
RESET
UAE204
INV01
UAG204
INV01
UAH204
INV01
UAI204
INV01
CLK8M
VCC
UAN165
AO22
B
UAL168
L8G
UAM168
L8G
BPD0
BPD1
BPD2
BPD3
BPD4
BPD5
BPD6
BPD7
BPD[0..7]
GND
UAP167
M198C
UAN168
L8G
UAO168
L8G
UAN129
INV01
UAO129
INV01
XSEL
UAE168
L8G
UAF168
L8G
DPD0
DPD1
DPD2
DPD3
DPD4
DPD5
DPD6
DPD7
DPD[0..7]
UAL165
AO22
D
UAJ167
M198C
UAG168
L8G
UAI168
L8G
UAL130
L8G
UAM130
L8G
APD0
APD1
APD2
APD3
APD4
APD5
APD6
APD7
APD[0..7]
UAO165
AO22
A
UAP128
M198C
UAN130
L8G
UAO130
L8G
UAE130
L8G
UAF130
L8G
CPD0
CPD1
CPD2
CPD3
CPD4
CPD5
CPD6
CPD7
CPD[0..7]
UAM165
AO22
C
UAJ128
M198C
UAG130
L8G
UAI130
L8G
TOP MATRIX BUS
0: MAIN-RESETI
1: CLK8M
2: UBD337-Q (SERIAL-CHNL)
3: UAA254-Q (SERIAL-LOAD)
4: UBD383-Q (GFX-CHNL)
5: BPD0 (P129)
6: BPD1 (P130)
7: BPD2 (P131)
8: BPD3 (P132)
9: BPD4 (P133)
10: BPD5 (P134)
11: BPD6 (P135)
12: BPD7 (P136)
13: APD0 (P137)
14: APD1 (P138)
15: APD2 (P139)
16: APD3 (P140)
17: APD4 (P141)
18: APD5 (P142)
19: APD6 (P143)
20: APD7 (P144)
21: DPD0 (P145)
22: DPD1 (P146)
23: DPD2 (P147)
24: DPD3 (P148)
25: DPD4 (P149)
26: DPD5 (P150)
27: DPD6 (P151)
28: DPD7 (P152)
29: CPD0 (P137)
30: CPD1 (P138)
31: CPD2 (P139)
32: CPD3 (P140)
33: CPD4 (P141)
34: CPD5 (P142)
35: CPD6 (P143)
36: CPD7 (P144)
Author: Loïc *WydD* Petit
Licence: CC-BY
Sheet: /tilemaps/xpd-bus2/
File: xpd-bus2.sch
Title:
Size: A3
Date: 2020-11-26
Rev:
KiCad E.D.A. eeschema 5.1.7-a382d34a887ubuntu18.04.1
Id: 43/69

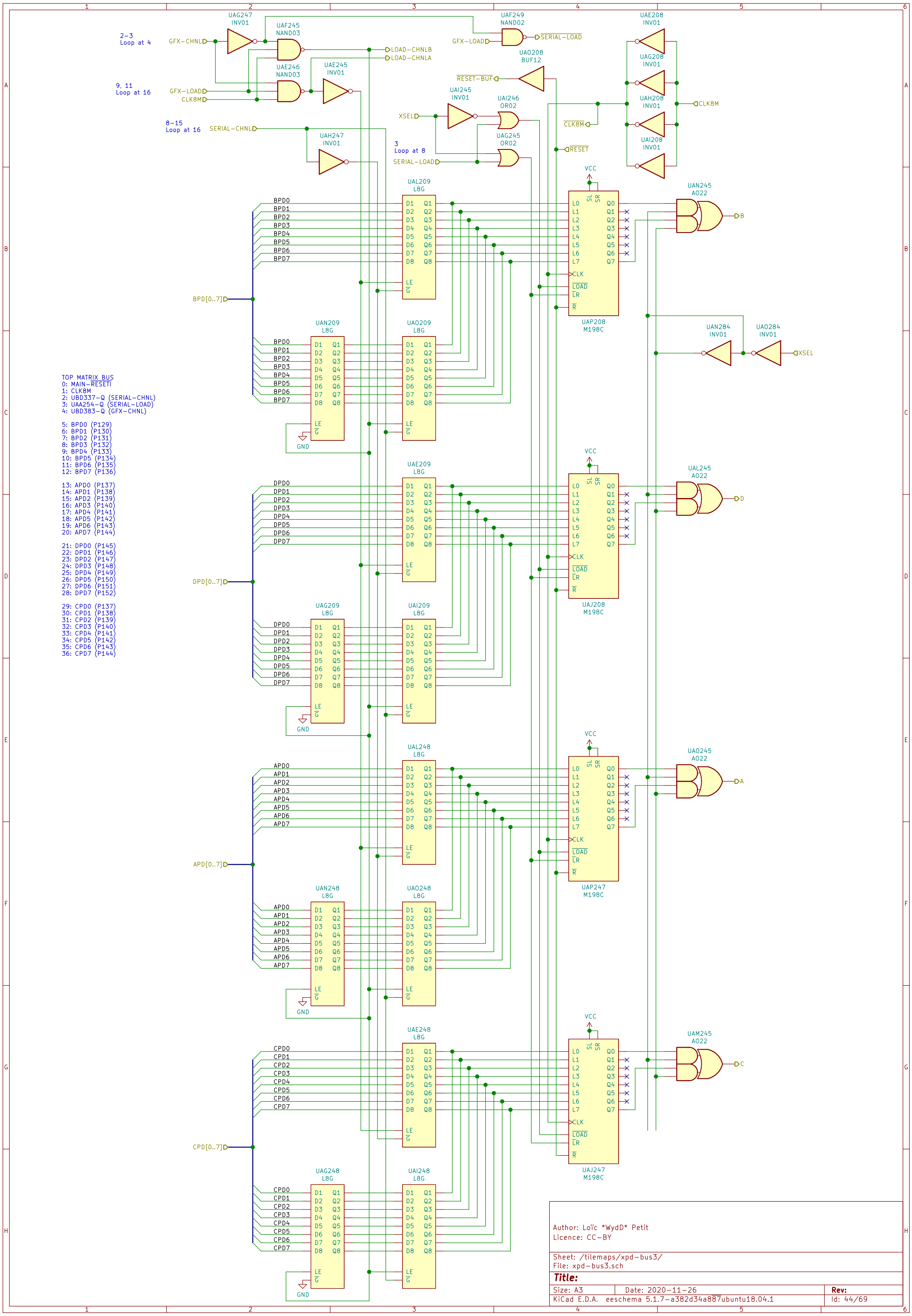
UAG247 INV01
UAF245 NAND03
UAE246 NAND03
UAE245 INV01
UAF249 NAND02
UAO208 BUF12
UAE208 INV01
UAG208 INV01
UAH208 INV01
UAI208 INV01
UAI245 INV01
UAI246 OR02
UAG245 OR02
UAH247 INV01
UAL209 L8G
UAN209 L8G
UAO209 L8G
UAE209 L8G
UAG209 L8G
UAI209 L8G
UAL248 L8G
UAN248 L8G
UAO248 L8G
UAE248 L8G
UAG248 L8G
UAI248 L8G
UAP208 M198C
UAJ208 M198C
UAP247 M198C
UAJ247 M198C
UAN245 AO22
UAL245 AO22
UAO245 AO22
UAM245 AO22
UAN284 INV01
UAO284 INV01
2-3 Loop at 4
9, 11 Loop at 16
8-15 Loop at 16
3 Loop at 8
GFX-CHNL
GFX-LOAD
CLK8M
SERIAL-CHNL
SERIAL-LOAD
LOAD-CHNLB
LOAD-CHNLA
RESET-BUF
XSEL
RESET
BPD[0..7]
DPD[0..7]
APD[0..7]
CPD[0..7]
VCC
GND
B
D
A
C
TOP MATRIX BUS
0: MAIN-RESET!
1: CLK8M
2: UBD337-Q (SERIAL-CHNL)
3: UAA254-Q (SERIAL-LOAD)
4: UBD383-Q (GFX-CHNL)
5: BPD0 (P129)
6: BPD1 (P130)
7: BPD2 (P131)
8: BPD3 (P132)
9: BPD4 (P133)
10: BPD5 (P134)
11: BPD6 (P135)
12: BPD7 (P136)
13: APD0 (P137)
14: APD1 (P138)
15: APD2 (P139)
16: APD3 (P140)
17: APD4 (P141)
18: APD5 (P142)
19: APD6 (P143)
20: APD7 (P144)
21: DPD0 (P145)
22: DPD1 (P146)
23: DPD2 (P147)
24: DPD3 (P148)
25: DPD4 (P149)
26: DPD5 (P150)
27: DPD6 (P151)
28: DPD7 (P152)
29: CPD0 (P137)
30: CPD1 (P138)
31: CPD2 (P139)
32: CPD3 (P140)
33: CPD4 (P141)
34: CPD5 (P142)
35: CPD6 (P143)
36: CPD7 (P144)
Author: Loïc *WydD* Petit
Licence: CC-BY
Sheet: /tilemaps/xpd-bus3/
File: xpd-bus3.sch
Title:
Size: A3
Date: 2020-11-26
Rev:
KiCad E.D.A. eeschema 5.1.7-a382d34a887ubuntu18.04.1
Id: 44/69

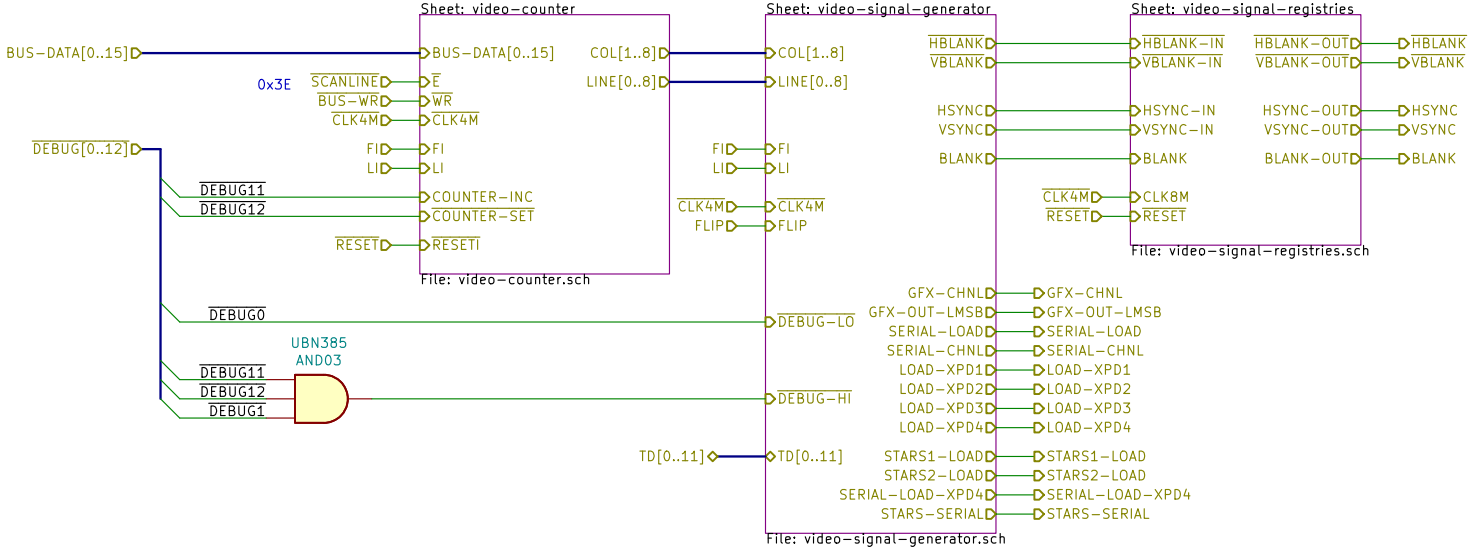

Author: Loïc *WydD* Petit
Licence: CC-BY

Sheet: /video-signals/
File: video-signals.sch

Title:

Size: A4	Date: 2020-11-26	**Rev:**
KiCad E.D.A. eeschema 5.1.7-a382d34a887ubuntu18.04.1		Id: 45/69

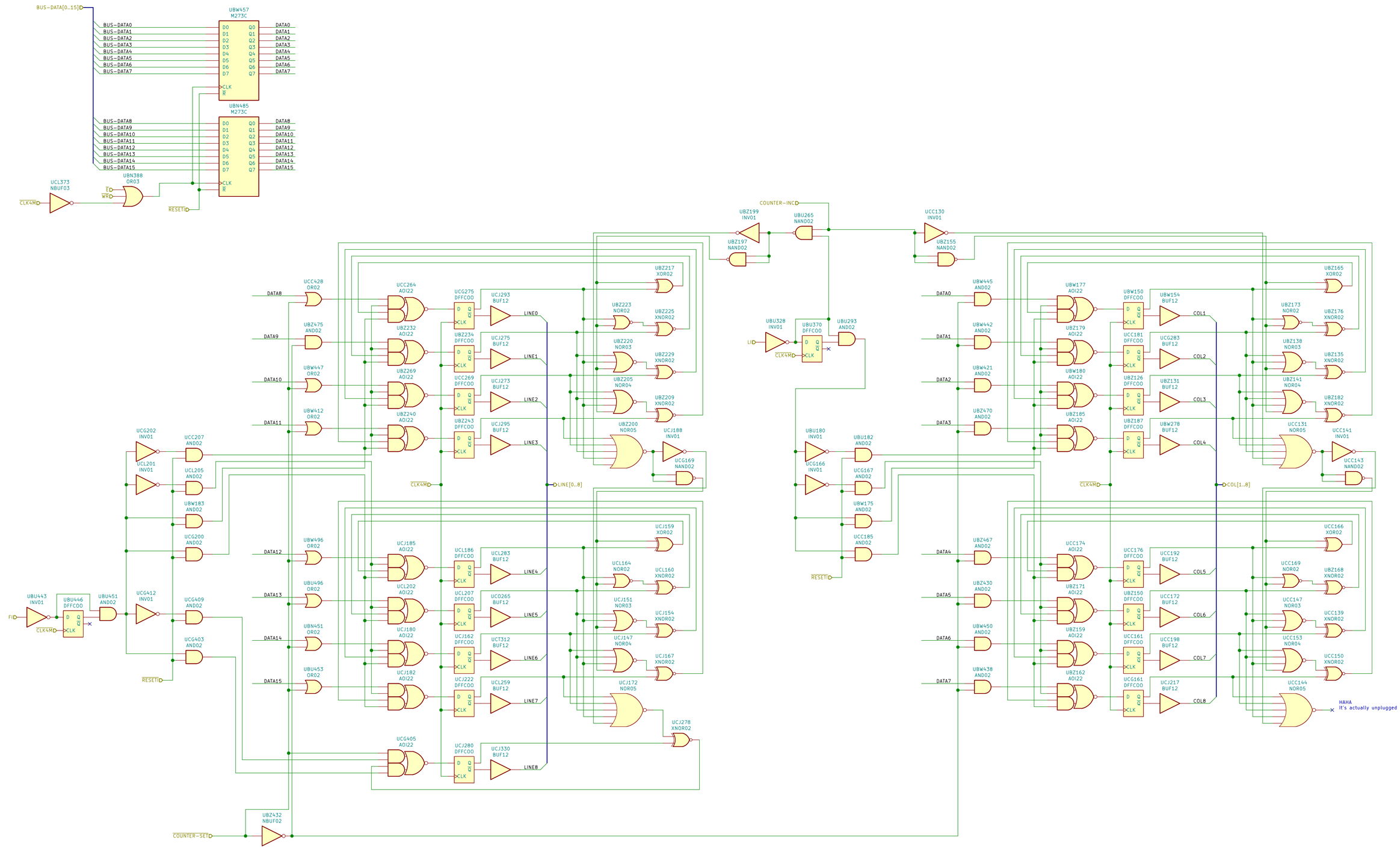

Author: Loïc *WydD* Petit
Licence: CC-BY

Sheet: /video-signals/video-counter/
File: video-counter.sch

Title:

Size: A2	Date: 2020-11-26	Rev:
KiCad E.D.A. eeschema 5.1.7-a382d34a887ubuntu18.04.1		Id: 46/69

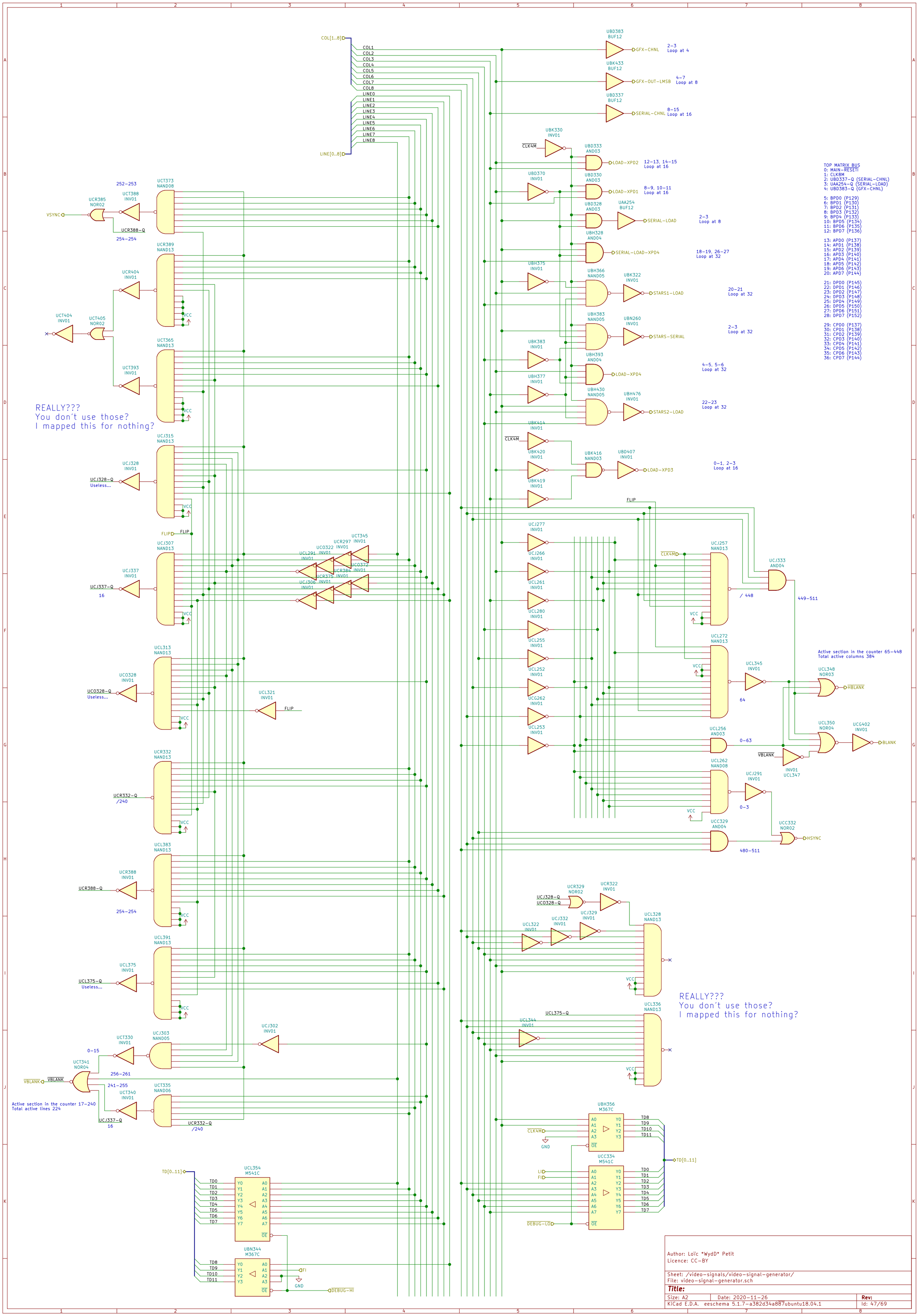

Author: Loïc *WydD* Petit
Licence: CC-BY

Sheet: /video-signals/video-signal-generator/
File: video-signal-generator.sch

Title:

Size: A2	Date: 2020-11-26	Rev:
KiCad E.D.A. eeschema 5.1.7-a382d34a887ubuntu18.04.1		Id: 47/69

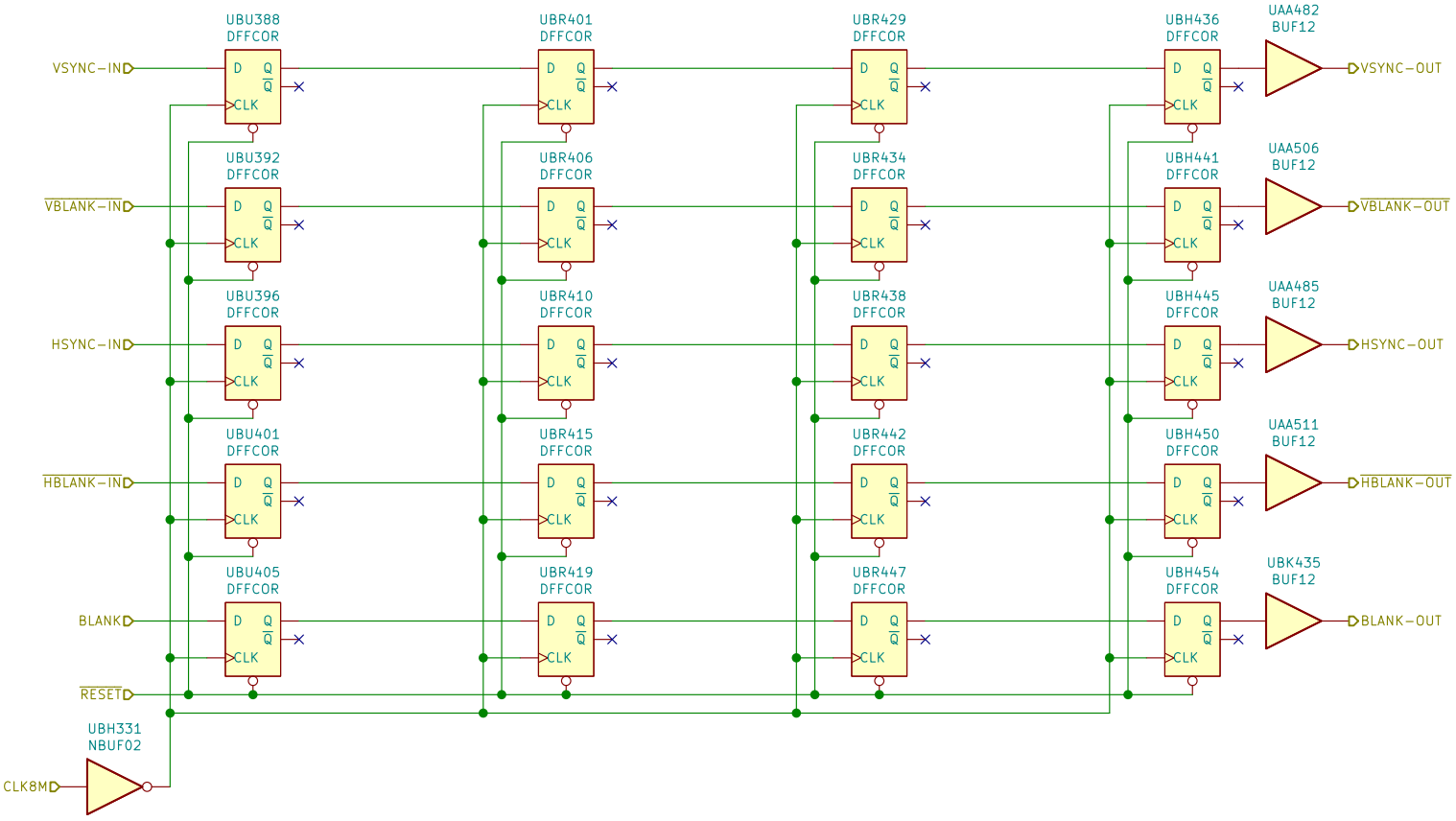

Author: Loïc *WydD* Petit
Licence: CC-BY

Sheet: /video-signals/video-signal-registries/
File: video-signal-registries.sch

Title:

Size: A4	Date: 2020-11-26	Rev:
KiCad E.D.A. eeschema 5.1.7-a382d34a887ubuntu18.04.1		Id: 48/69

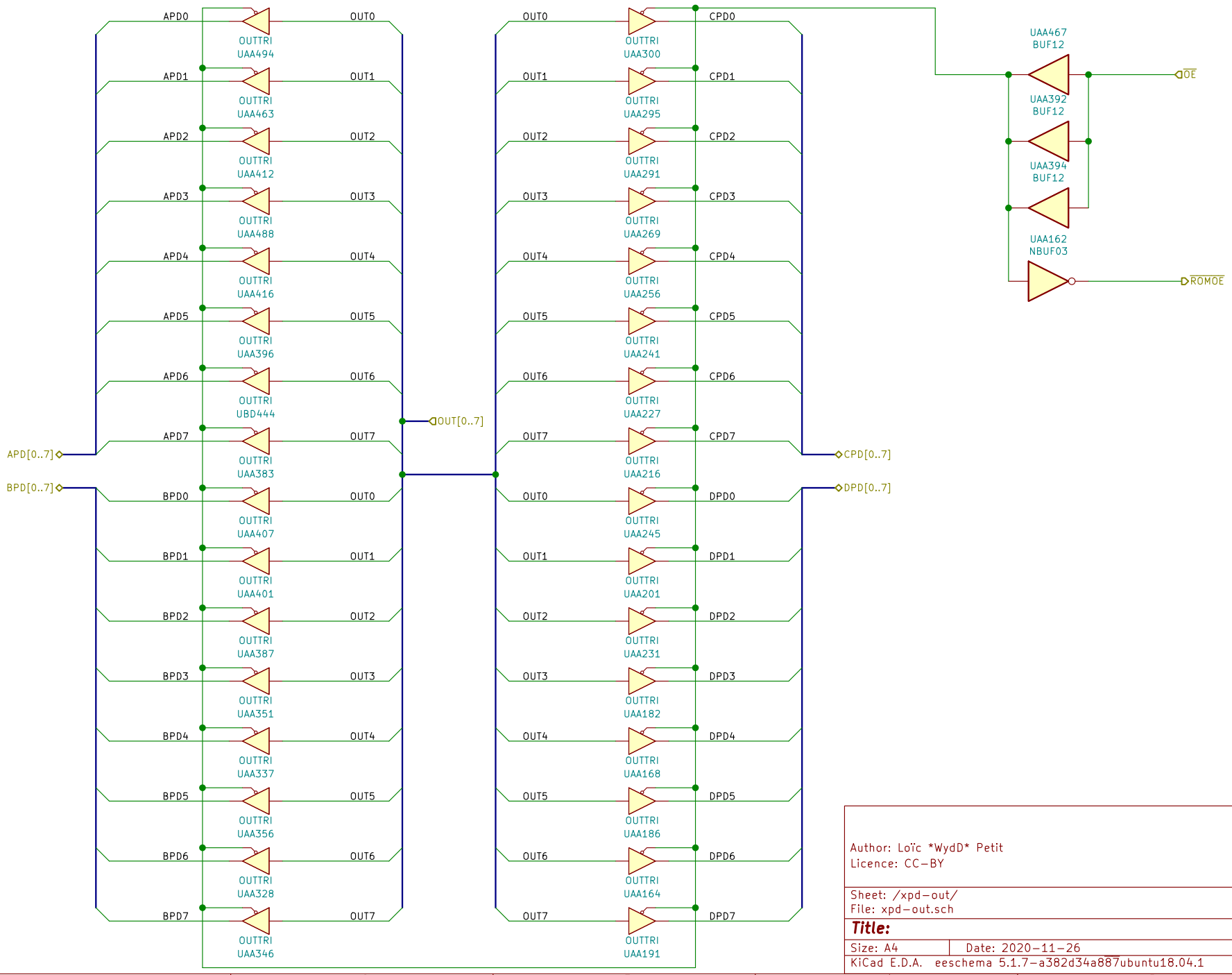

Author: Loïc *WydD* Petit
Licence: CC-BY

Sheet: /xpd-out/
File: xpd-out.sch

Title:

Size: A4	Date: 2020-11-26	Rev:
KiCad E.D.A. eeschema 5.1.7-a382d34a887ubuntu18.04.1		Id: 49/69

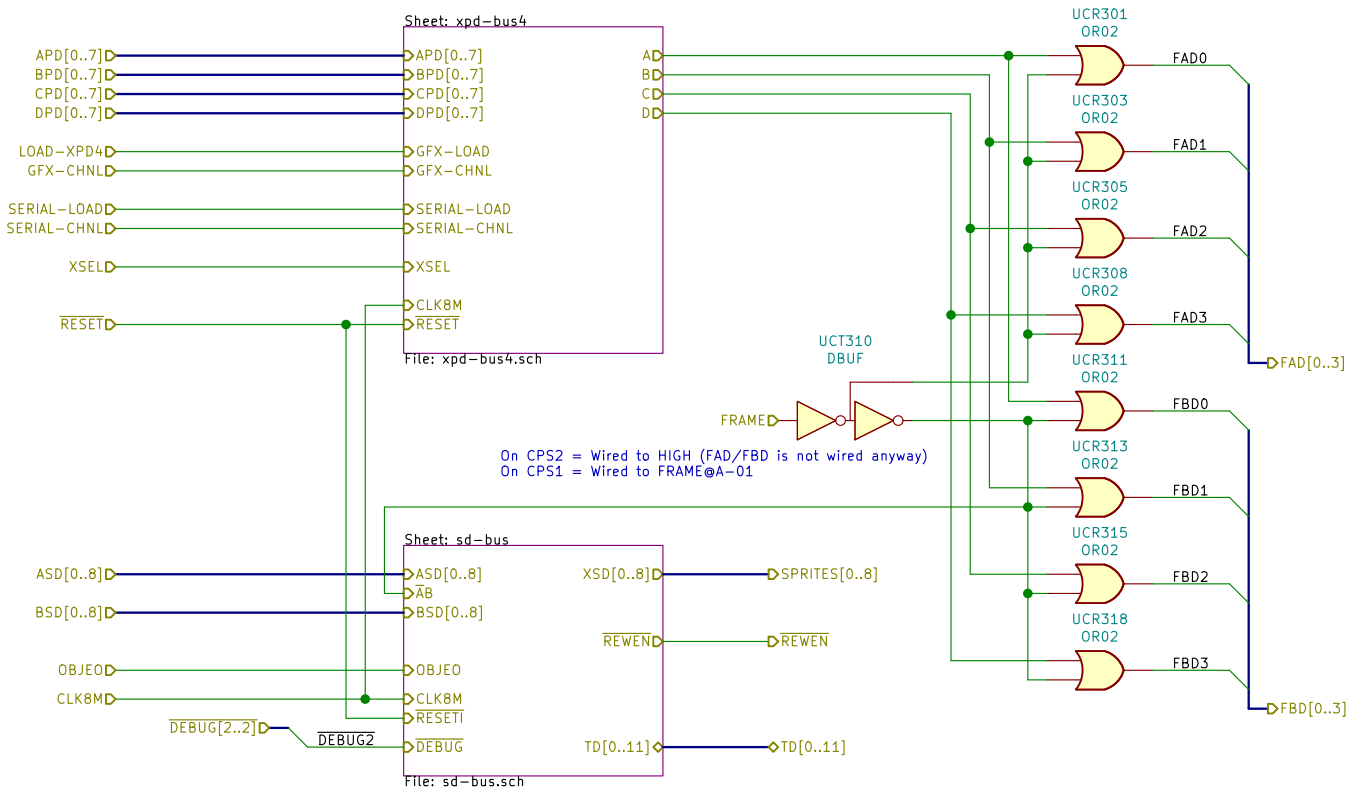

The SPRITES generation is split in two.
XPD-BUS4 streams the data to FAD/FBD to be stored in OBJRAM
It is handled by the A-01.
It comes back to ASD/BSD to be muxed to the SPRITES bus

Author: Loïc *WydD* Petit
Licence: CC-BY

Sheet: /obj-manager/
File: obj-manager.sch

Title:

Size: A4	Date: 2020-11-26	**Rev:**
KiCad E.D.A. eeschema 5.1.7-a382d34a887ubuntu18.04.1		Id: 50/69

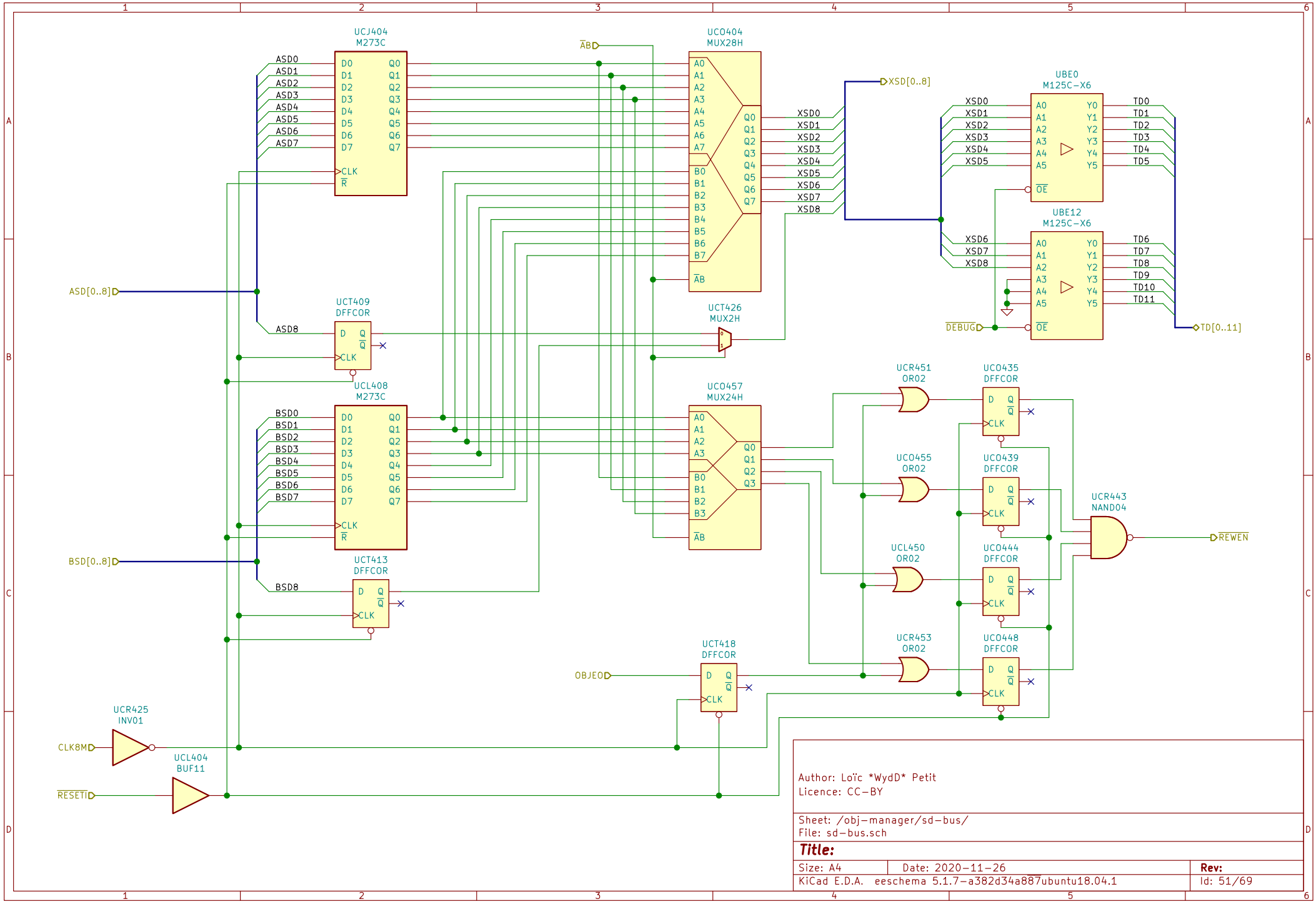
UCJ404
M273C
UCO404
MUX28H
UBE0
M125C-X6
UBE12
M125C-X6
UCT409
DFFCOR
UCT426
MUX2H
UCL408
M273C
UCO457
MUX24H
UCT413
DFFCOR
UCT418
DFFCOR
UCR451
OR02
UCO435
DFFCOR
UCO455
OR02
UCO439
DFFCOR
UCL450
OR02
UCO444
DFFCOR
UCR453
OR02
UCO448
DFFCOR
UCR443
NAND04
UCR425
INV01
UCL404
BUF11
ASD[0..8]
BSD[0..8]
XSD[0..8]
TD[0..11]
ÃB
DEBUG
OBJEO
CLK8M
RESETI
REWEN
Author: Loïc *WydD* Petit
Licence: CC-BY
Sheet: /obj-manager/sd-bus/
File: sd-bus.sch
Title:
Size: A4
Date: 2020-11-26
Rev:
KiCad E.D.A. eeschema 5.1.7-a382d34a887ubuntu18.04.1
Id: 51/69

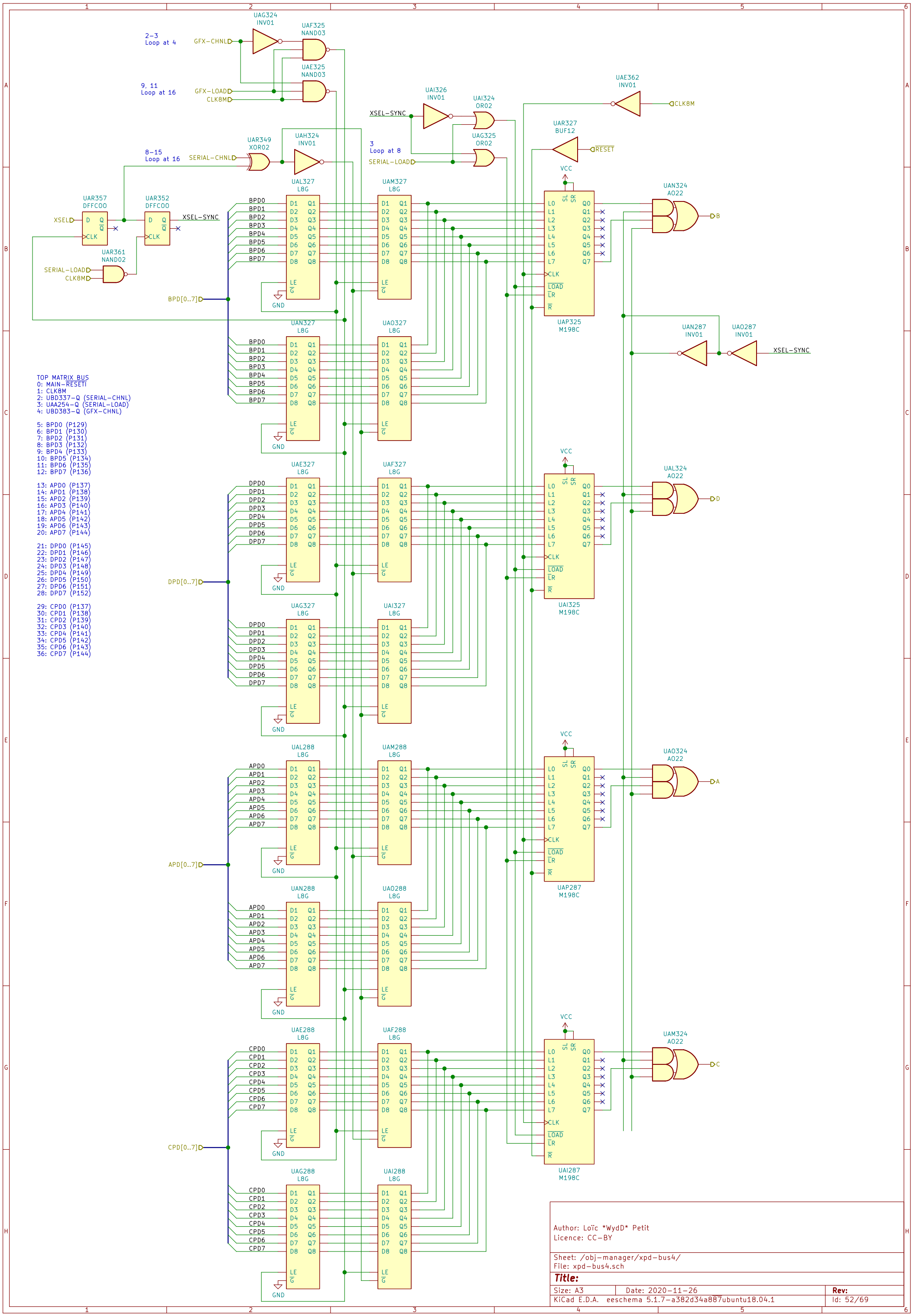
UAG324 INV01
UAF325 NAND03
UAE325 NAND03
2-3 Loop at 4
9, 11 Loop at 16
GFX-CHNL
GFX-LOAD
CLK8M
UAI326 INV01
UAI324 OR02
UAG325 OR02
XSEL-SYNC
3 Loop at 8
SERIAL-LOAD
UAE362 INV01
UAR327 BUF12
RESET
UAR349 XOR02
UAH324 INV01
8-15 Loop at 16
SERIAL-CHNL
UAR357 DFFC00
UAR352 DFFC00
XSEL
UAR361 NAND02
BPD[0..7]
UAL327 L8G
UAM327 L8G
UAN327 L8G
UAO327 L8G
UAP325 M198C
UAN324 AO22
UAN287 INV01
UAO287 INV01
TOP MATRIX BUS
0: MAIN-RESETI
1: CLK8M
2: UBD337-Q (SERIAL-CHNL)
3: UAA254-Q (SERIAL-LOAD)
4: UBD383-Q (GFX-CHNL)
5: BPD0 (P129)
6: BPD1 (P130)
7: BPD2 (P131)
8: BPD3 (P132)
9: BPD4 (P133)
10: BPD5 (P134)
11: BPD6 (P135)
12: BPD7 (P136)
13: APD0 (P137)
14: APD1 (P138)
15: APD2 (P139)
16: APD3 (P140)
17: APD4 (P141)
18: APD5 (P142)
19: APD6 (P143)
20: APD7 (P144)
21: DPD0 (P145)
22: DPD1 (P146)
23: DPD2 (P147)
24: DPD3 (P148)
25: DPD4 (P149)
26: DPD5 (P150)
27: DPD6 (P151)
28: DPD7 (P152)
29: CPD0 (P137)
30: CPD1 (P138)
31: CPD2 (P139)
32: CPD3 (P140)
33: CPD4 (P141)
34: CPD5 (P142)
35: CPD6 (P143)
36: CPD7 (P144)
DPD[0..7]
UAE327 L8G
UAF327 L8G
UAG327 L8G
UAI327 L8G
UAI325 M198C
UAL324 AO22
UAL288 L8G
UAM288 L8G
UAN288 L8G
UAO288 L8G
UAP287 M198C
UAO324 AO22
APD[0..7]
UAE288 L8G
UAF288 L8G
UAG288 L8G
UAI288 L8G
UAI287 M198C
UAM324 AO22
CPD[0..7]
VCC
GND
Author: Loïc *WydD* Petit
Licence: CC-BY
Sheet: /obj-manager/xpd-bus4/
File: xpd-bus4.sch
Title:
Size: A3
Date: 2020-11-26
Rev:
KiCad E.D.A. eeschema 5.1.7-a382d34a887ubuntu18.04.1
Id: 52/69

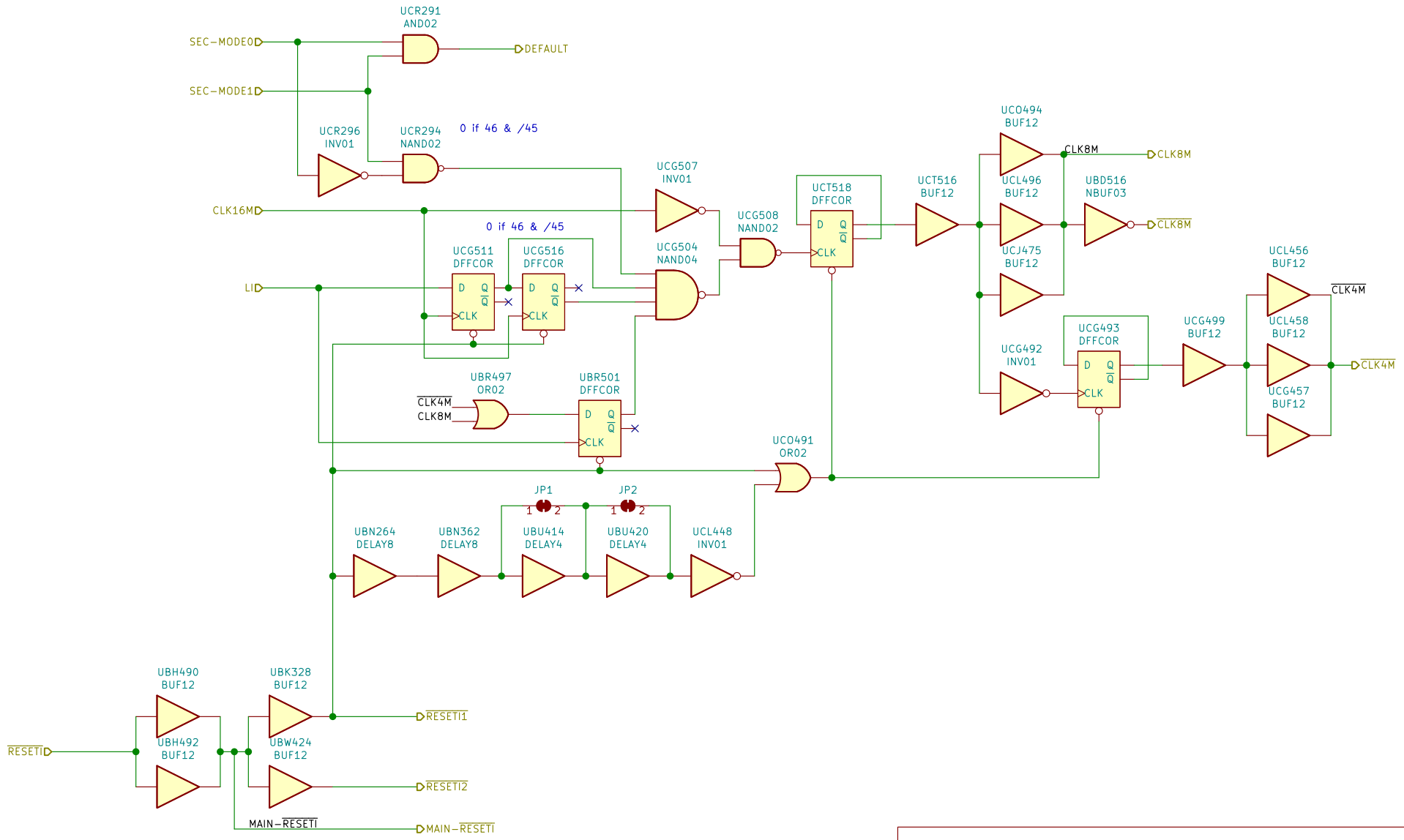

Author: Loïc *WydD* Petit
Licence: CC-BY

Sheet: /main-signals/
File: main-signals.sch

Title:

Size: A4	Date: 2020-11-26	Rev:
KiCad E.D.A. eeschema 5.1.7-a382d34a887ubuntu18.04.1		Id: 53/69

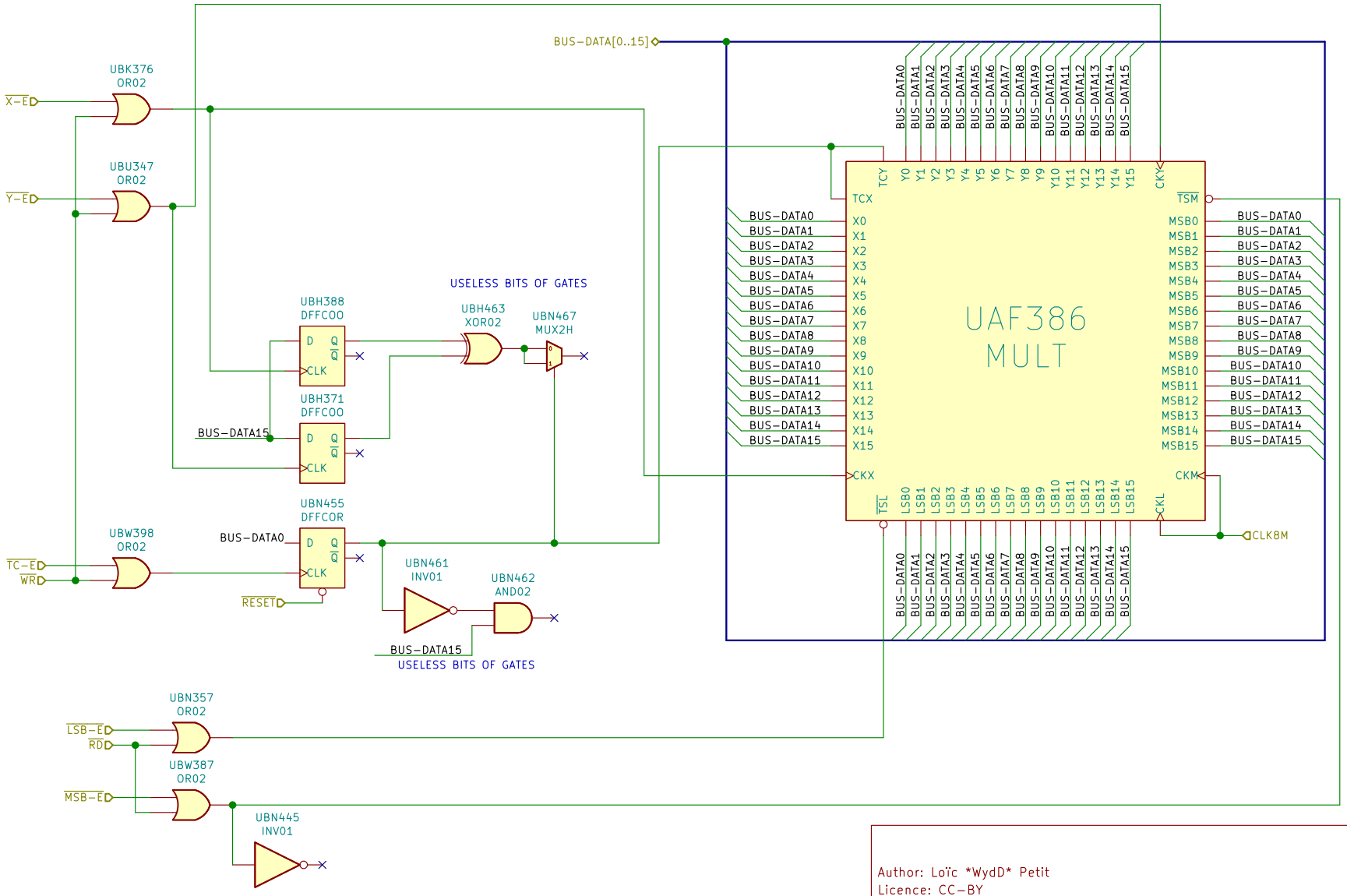

Author: Loïc *WydD* Petit
Licence: CC-BY

Sheet: /multiplier/
File: multiplier.sch

Title:

Size: A4	Date: 2020-11-26	Rev:
KiCad E.D.A. eeschema 5.1.7-a382d34a887ubuntu18.04.1		Id: 54/69

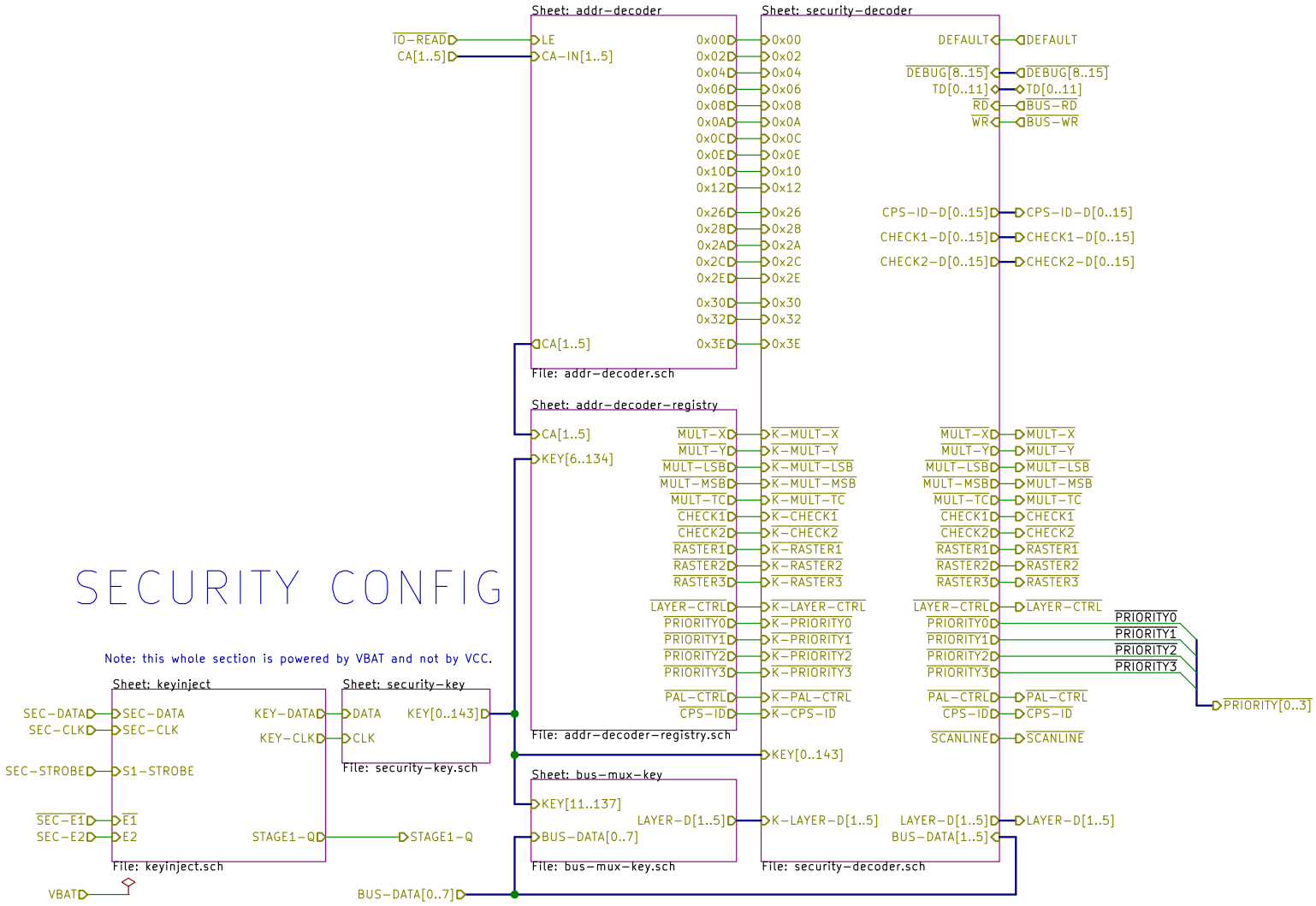

Author: Loïc *WydD* Petit
Licence: CC-BY

Sheet: /security-management/
File: security-management.sch

Title:

Size: A4	Date: 2020-11-26	Rev:
KiCad E.D.A. eeschema 5.1.7-a382d34a887ubuntu18.04.1		Id: 55/69

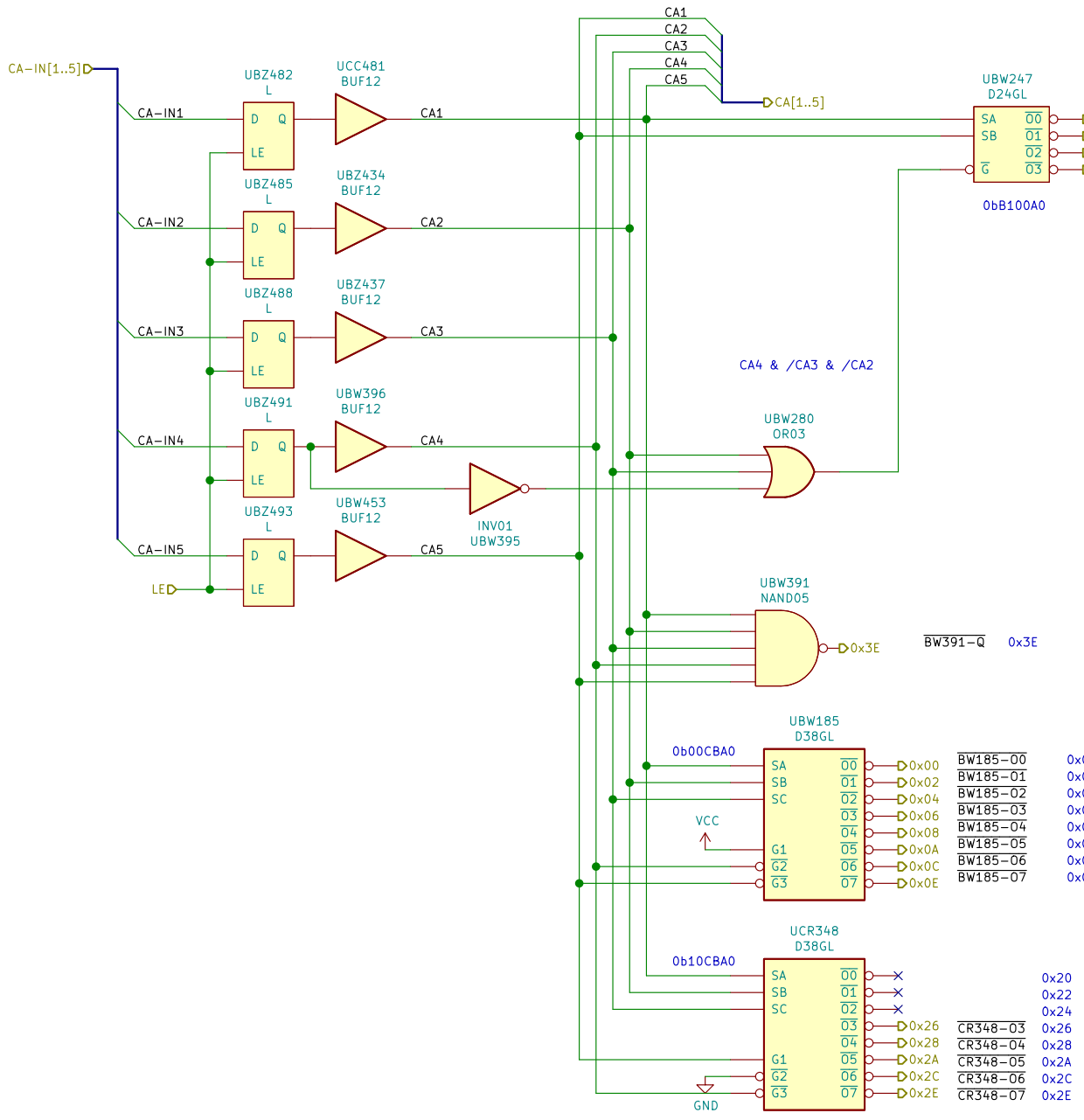

Author: Loïc *WydD* Petit
Licence: CC-BY

Sheet: /security-management/addr-decoder/
File: addr-decoder.sch

Title:

Size: A4	Date: 2020-11-26	**Rev:**
KiCad E.D.A. eeschema 5.1.7-a382d34a887ubuntu18.04.1		Id: 56/69

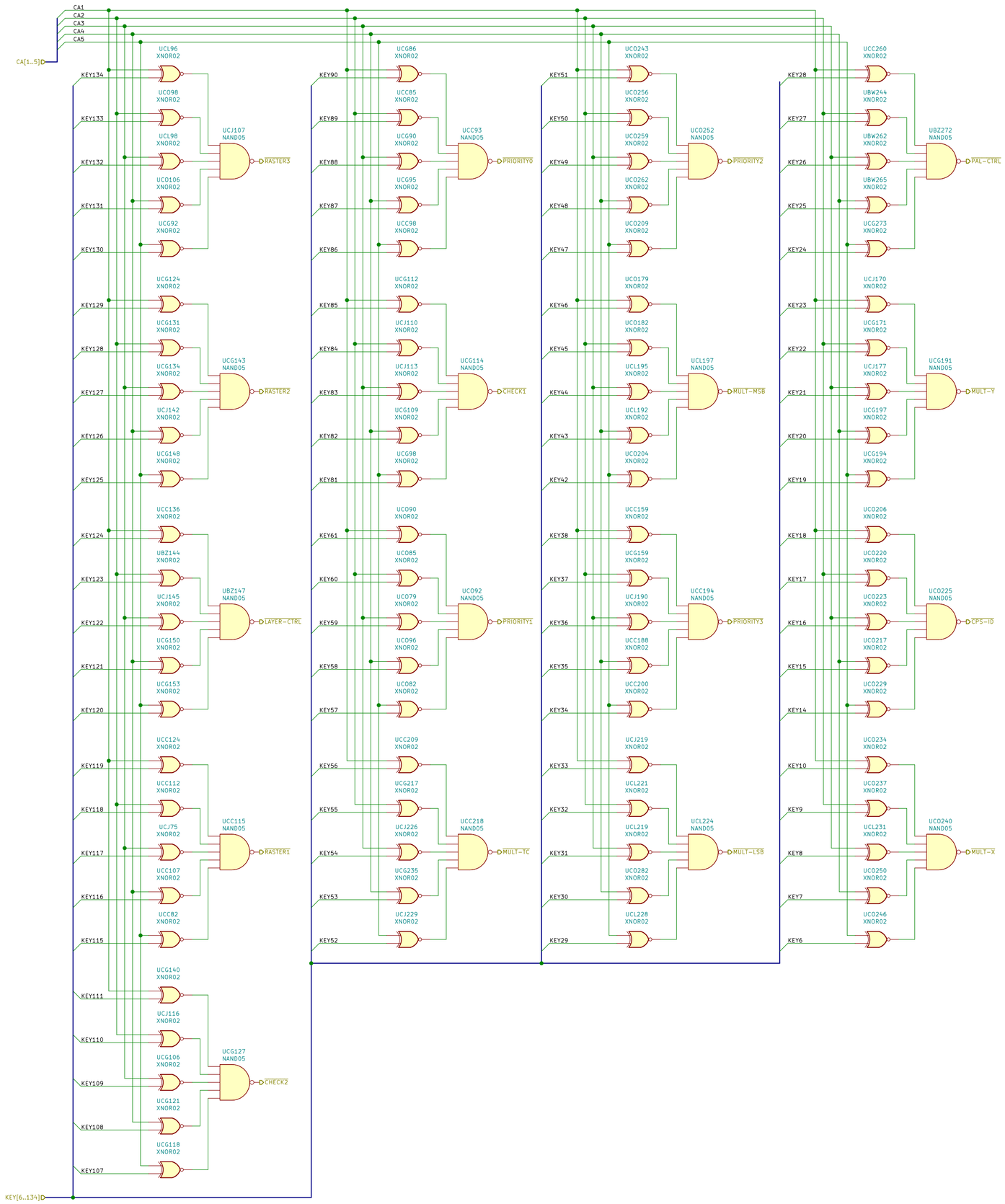

Author: Loïc *WydD* Petit
Licence: CC-BY

Sheet: /security-management/addr-decoder-registry/
File: addr-decoder-registry.sch

Title:

Size: A2	Date: 2020-11-26	Rev:
KiCad E.D.A. eeschema 5.1.7-a382d34a887ubuntu18.04.1		Id: 57/69

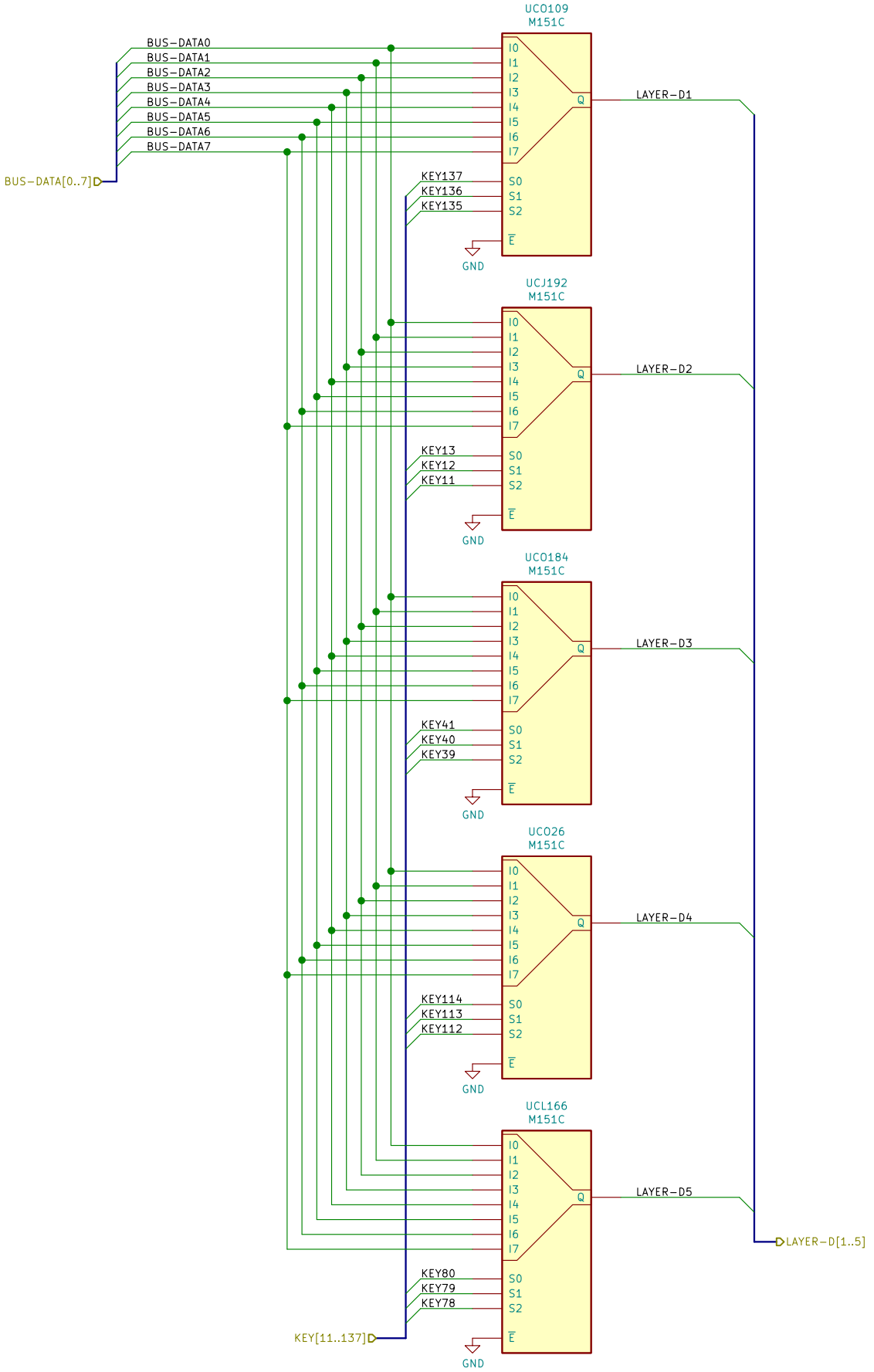

Author: Loïc *WydD* Petit
Licence: CC-BY

Sheet: /security-management/bus-mux-key/
File: bus-mux-key.sch

Title:

Size: A4	Date: 2020-11-26	Rev:
KiCad E.D.A. eeschema 5.1.7-a382d34a887ubuntu18.04.1		Id: 58/69

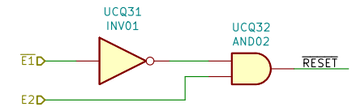

Stage 0: Unlock security
- PIN43 LOW
- PIN44 HIGH

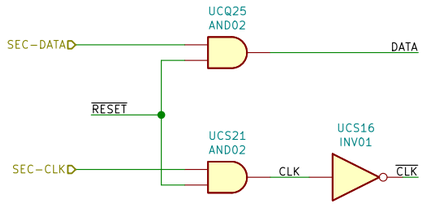

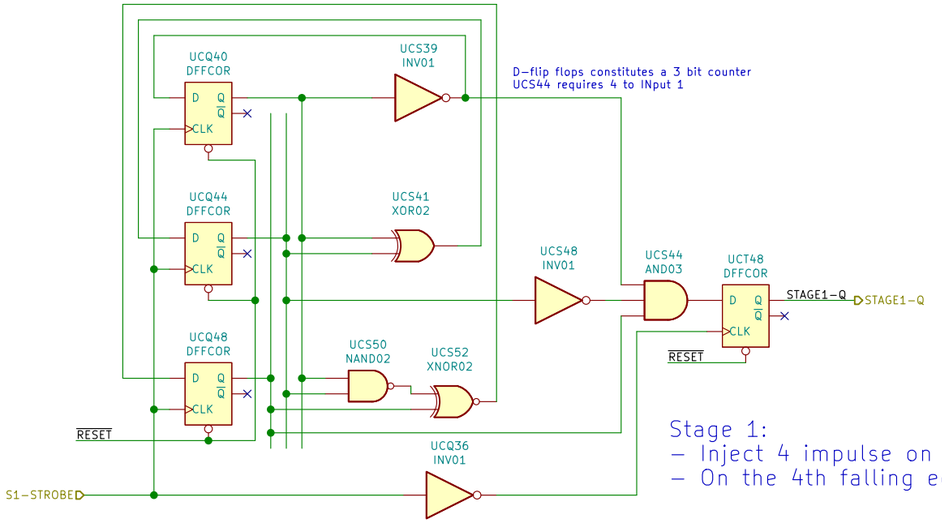

Stage 1:
- Inject 4 impulse on PIN42
- On the 4th falling edge the stage 1 is complete

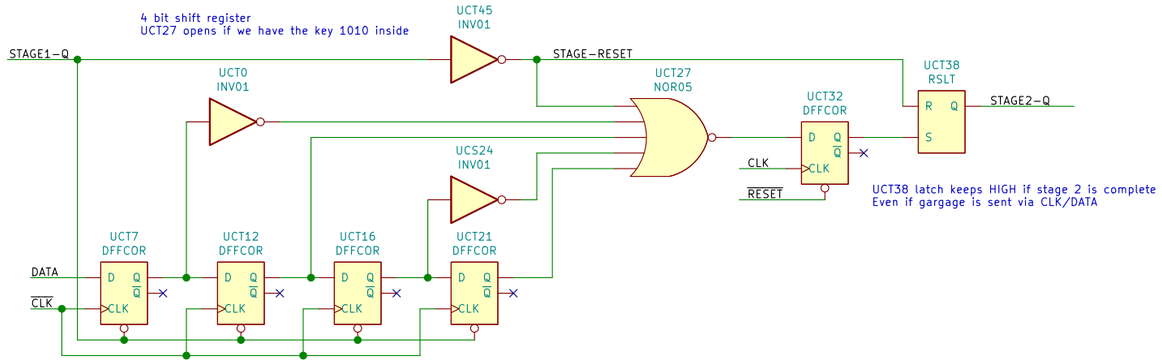

Stage 2:
- Inject 1>0>1 using PIN61 (CLK) and PIN62 (DATA)
- Data is registered on the falling edge
- After an additional rise edge, it completes the stage 2

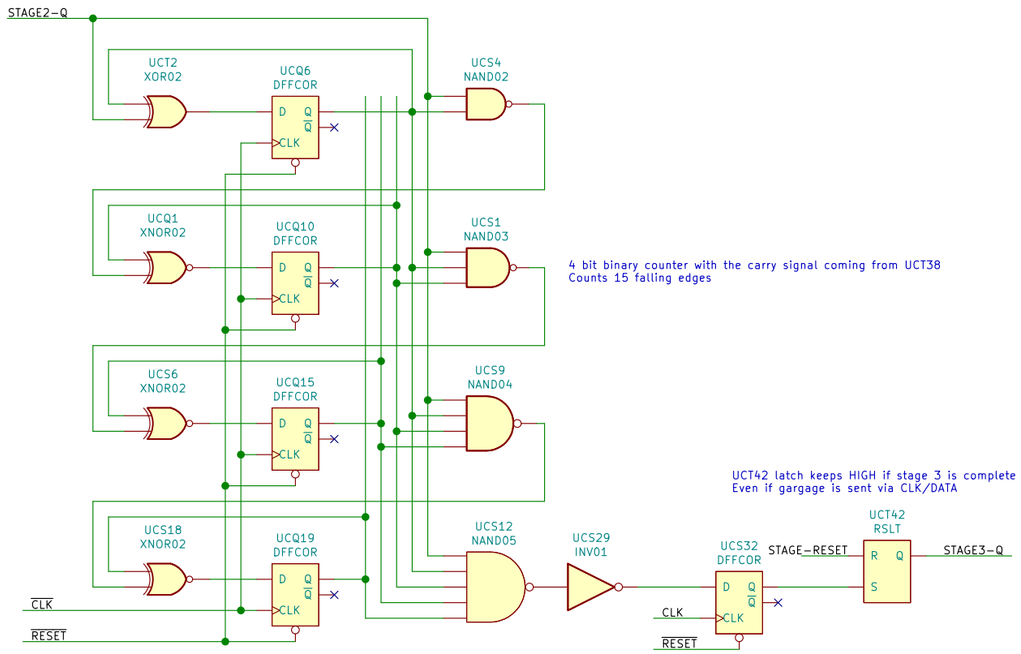

Stage 3:
- After that, inject 15 falling edge of PIN61 (CLK)
- On the next CLK rising edge, the stage 3 will complete and stage 4 will also start

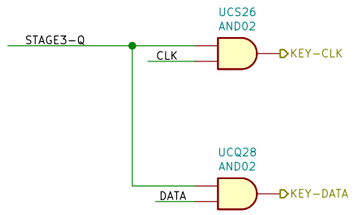

Stage 4: Inject parameters
- Use CLK/DATA pins to inject the 144 bits of keys
- When you are done, relock the security using PIN42/43

Author: Loïc *WydD* Petit
Licence: CC-BY

Sheet: /security-management/keyinject/
File: keyinject.sch

Title:

Size: A3	Date: 2020-11-26	Rev:
KiCad E.D.A. eeschema 5.1.7-a382d34a887ubuntu18.04.1		Id: 59/69

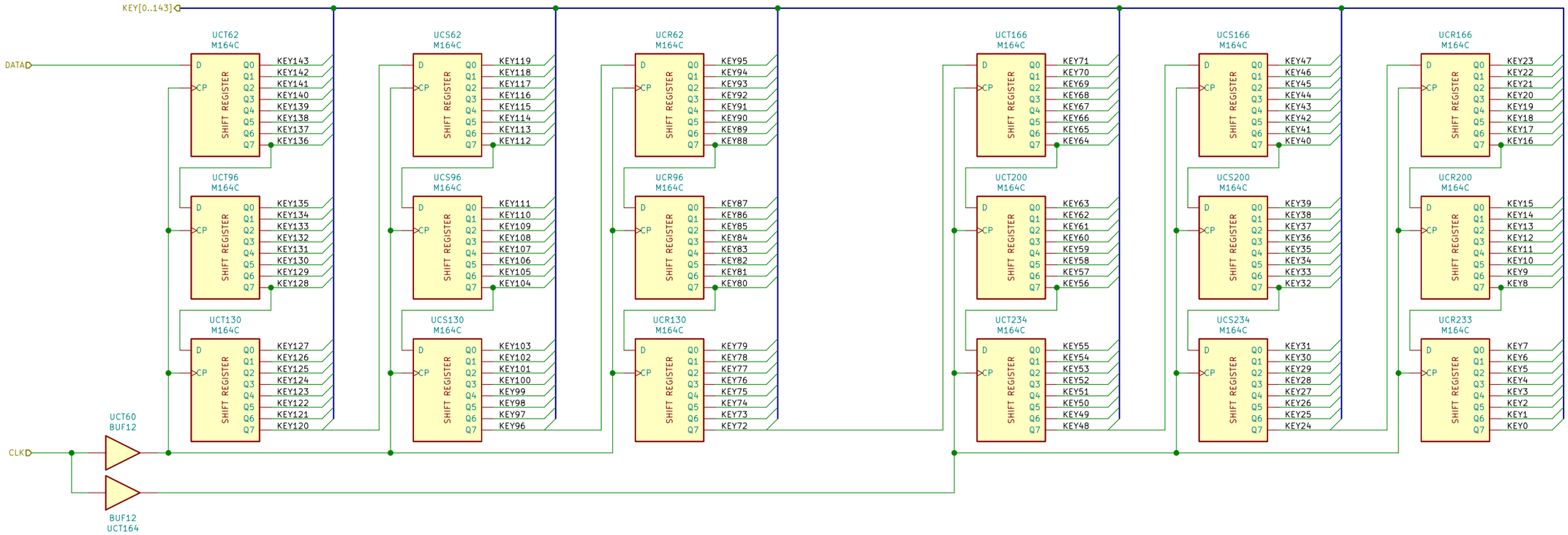

Author: Loïc *WydD* Petit
Licence: CC-BY

Sheet: /security-management/security-key/
File: security-key.sch

Title:

Size: A3	Date: 2020-11-26	**Rev:**
KiCad E.D.A. eeschema 5.1.7-a382d34a887ubuntu18.04.1		Id: 60/69

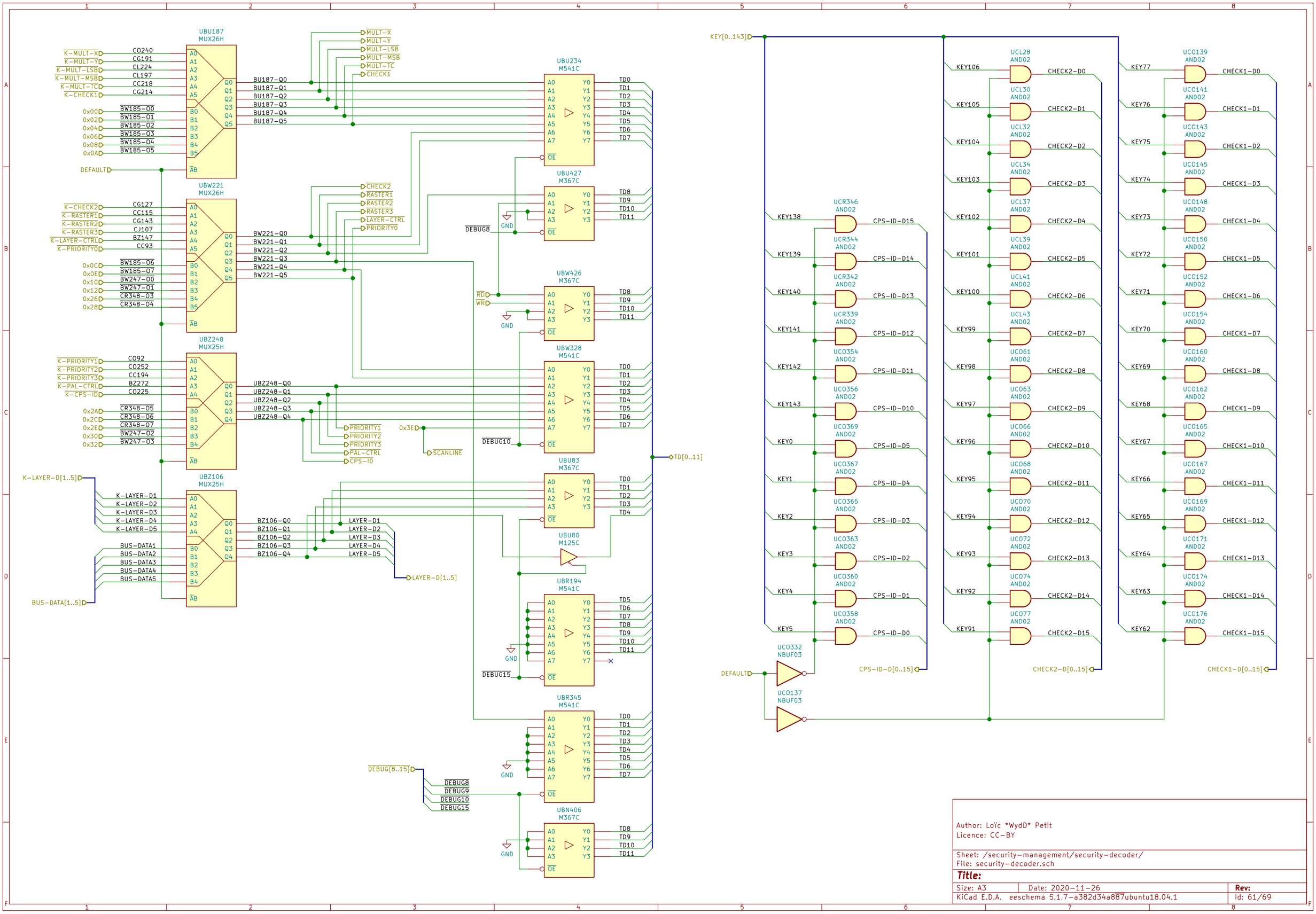

Author: Loïc *WydD* Petit
Licence: CC-BY

Sheet: /security-management/security-decoder/
File: security-decoder.sch

Title:

Size: A3	Date: 2020-11-26	Rev:
KiCad E.D.A. eeschema 5.1.7-a382d34a887ubuntu18.04.1		Id: 61/69

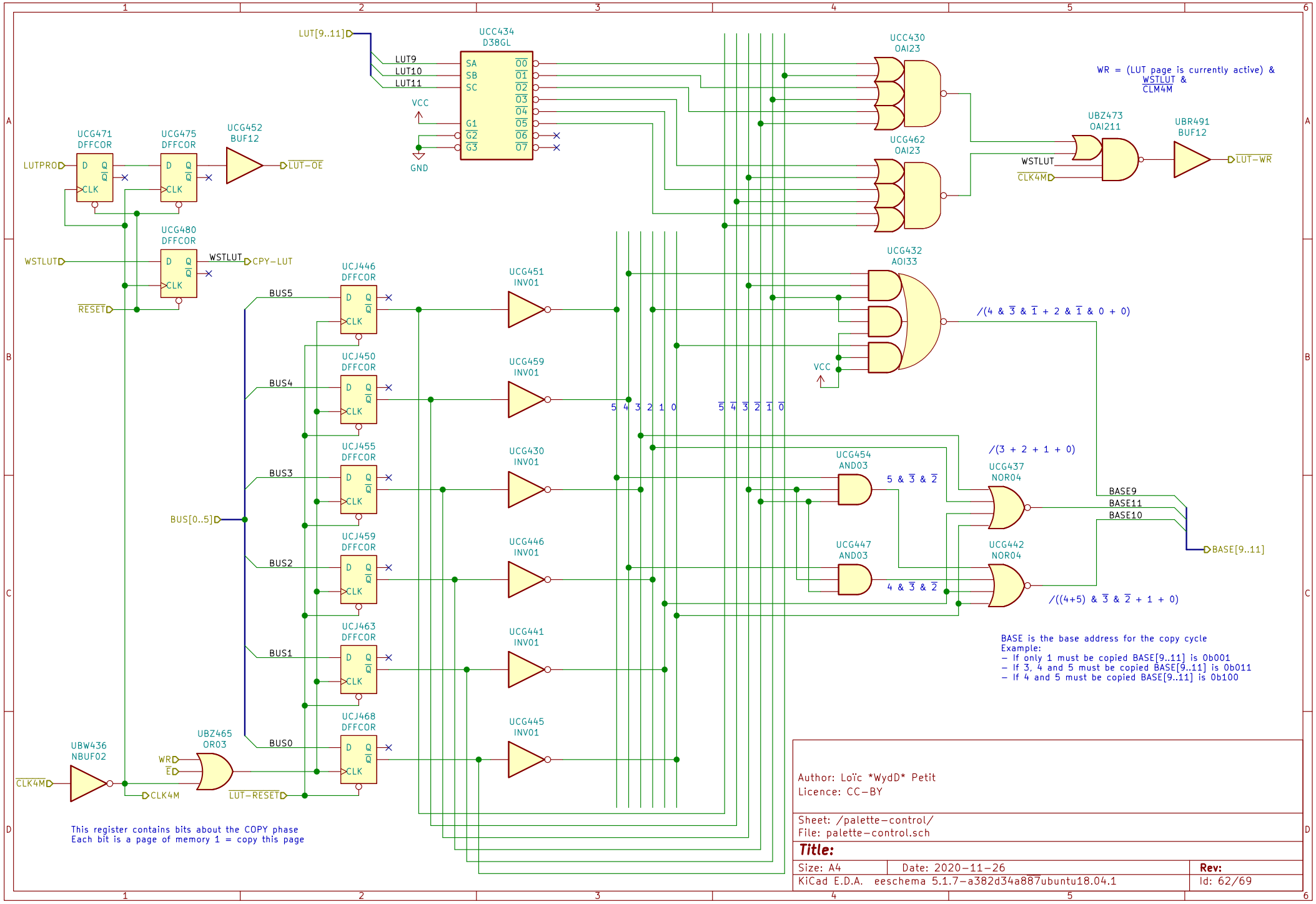

Author: Loïc *WydD* Petit
Licence: CC-BY

Sheet: /palette-control/
File: palette-control.sch

Title:

Size: A4	Date: 2020-11-26	Rev:
KiCad E.D.A. eeschema 5.1.7-a382d34a887ubuntu18.04.1		Id: 62/69

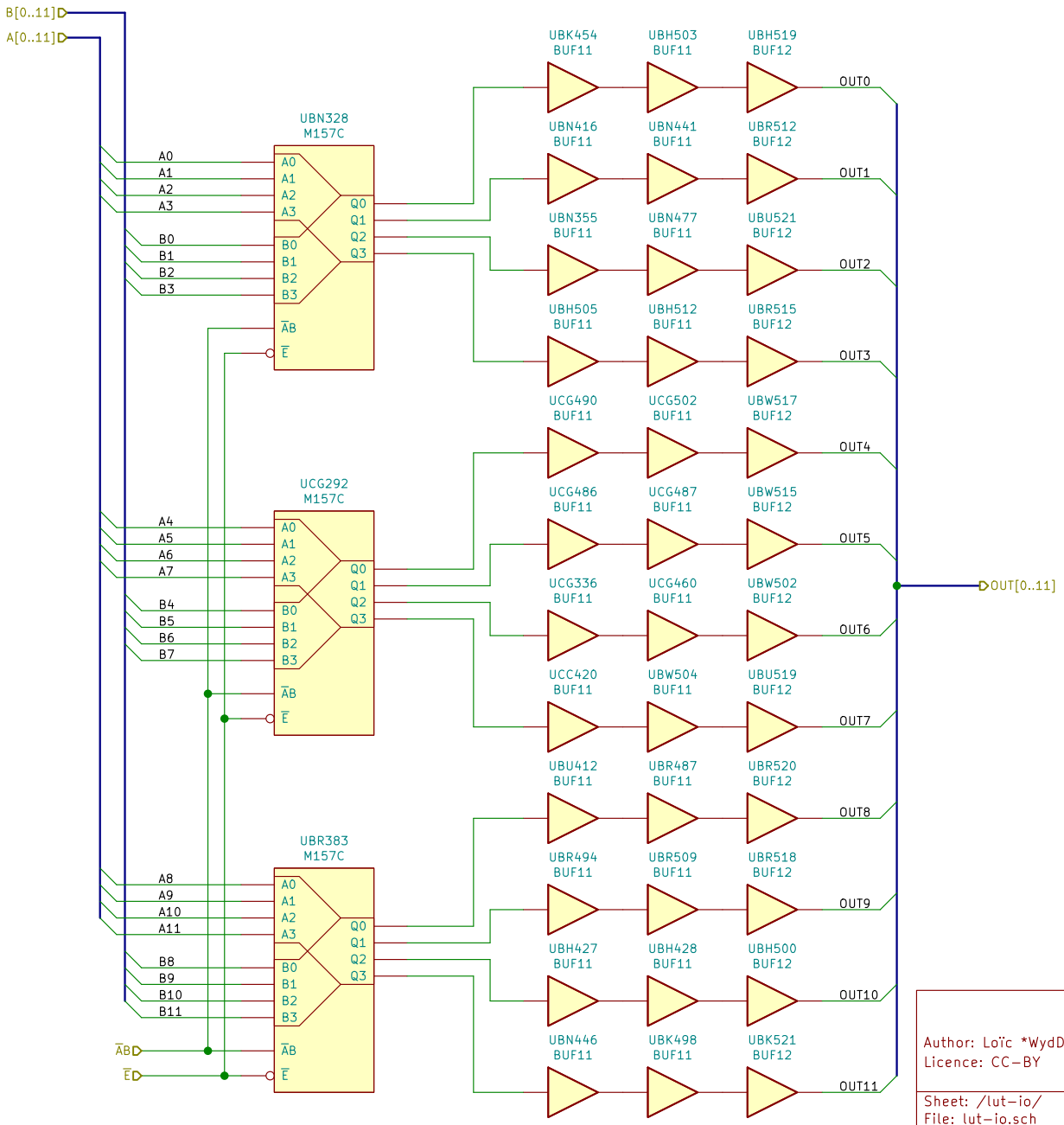

Author: Loïc *WydD* Petit
Licence: CC-BY

Sheet: /lut-io/
File: lut-io.sch

Title:

Size: A4	Date: 2020-11-26	Rev:
KiCad E.D.A. eeschema 5.1.7-a382d34a887ubuntu18.04.1		Id: 63/69

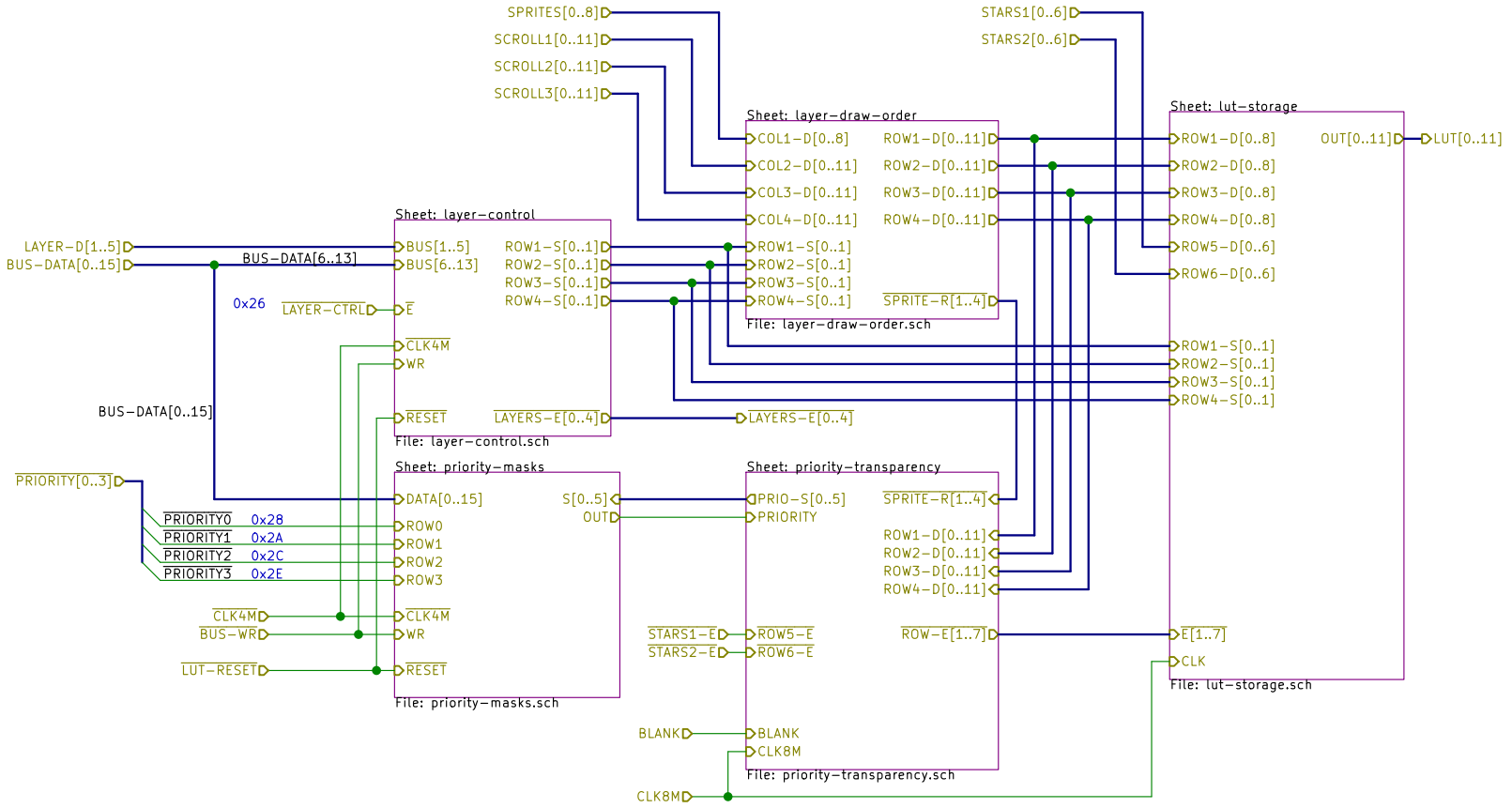

Author: Loïc *WydD* Petit
Licence: CC-BY

Sheet: /lut-assembly/
File: lut-assembly.sch

Title:

Size: A4	Date: 2020-11-26	**Rev:**
KiCad E.D.A. eeschema 5.1.7-a382d34a887ubuntu18.04.1		Id: 64/69

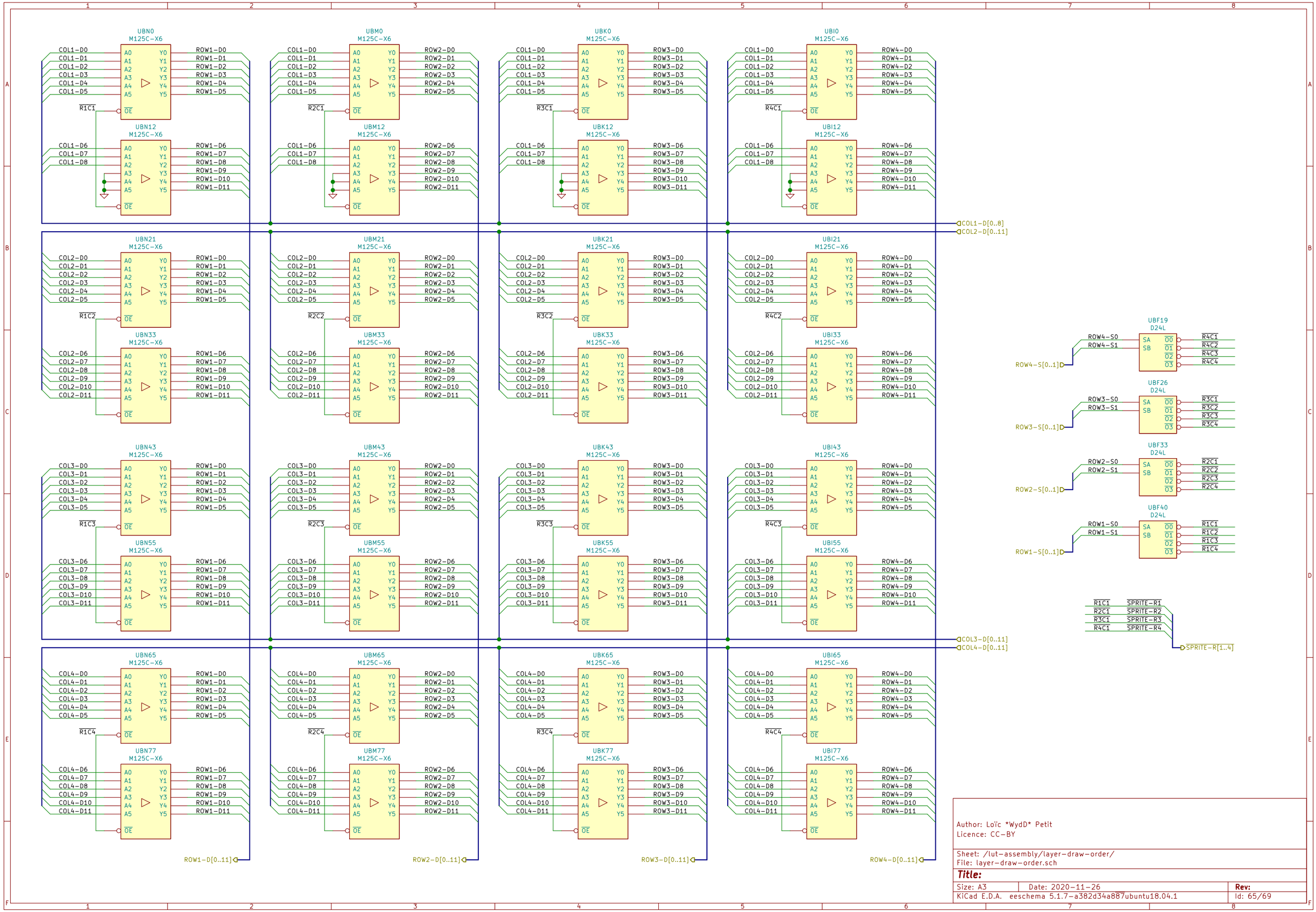

Author: Loïc *WydD* Petit
Licence: CC-BY

Sheet: /lut-assembly/layer-draw-order/
File: layer-draw-order.sch

Title:

Size: A3	Date: 2020-11-26	Rev:
KiCad E.D.A. eeschema 5.1.7-a382d34a887ubuntu18.04.1		Id: 65/69

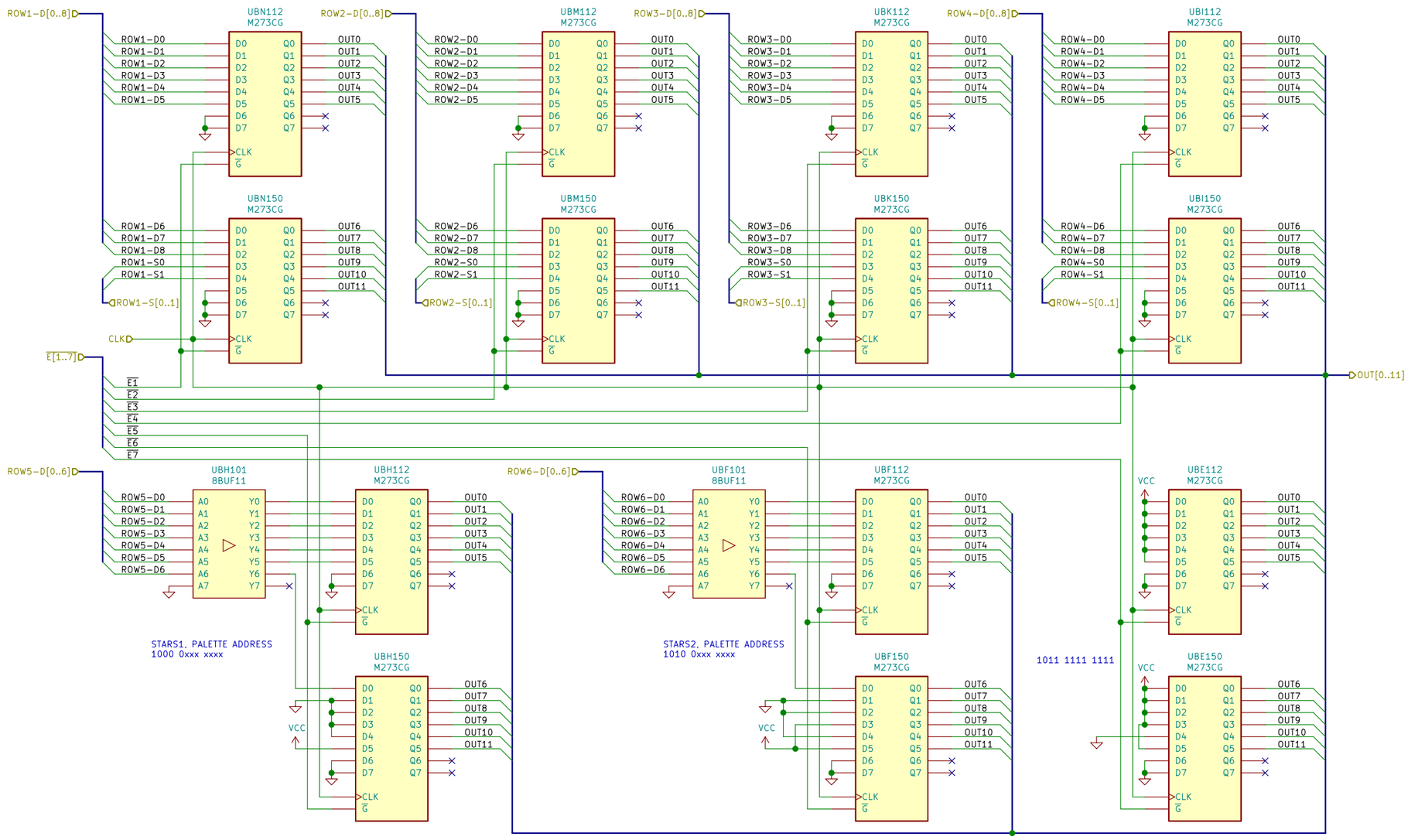

Author: Loïc *WydD* Petit
Licence: CC-BY

Sheet: /lut-assembly/lut-storage/
File: lut-storage.sch

Title:

Size: A3	Date: 2020-11-26	Rev:
KiCad E.D.A. eeschema 5.1.7-a382d34a887ubuntu18.04.1		Id: 66/69

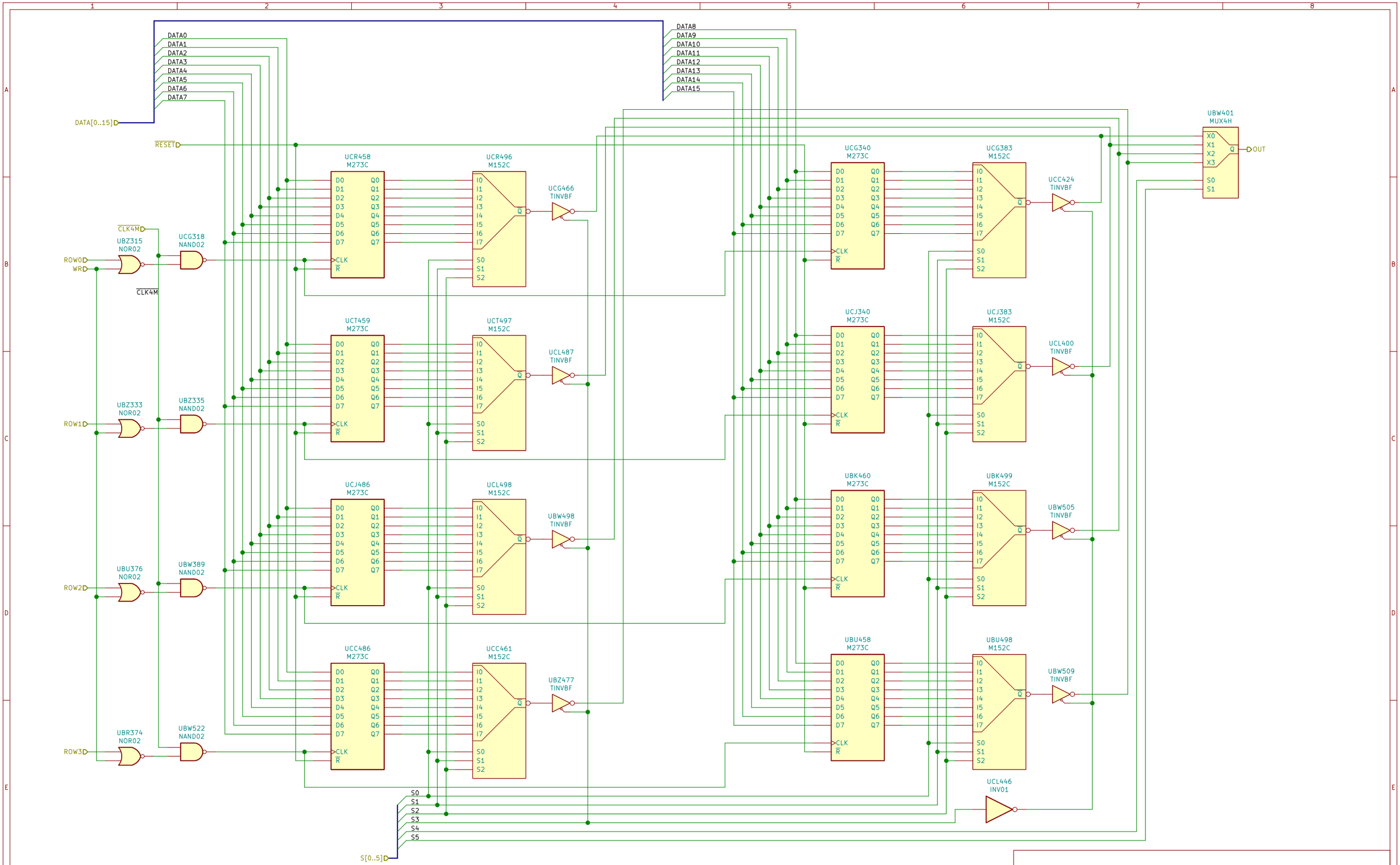

Author: Loïc *WydD* Petit
Licence: CC-BY

Sheet: /lut-assembly/priority-masks/
File: priority-masks.sch

Title:

Size: A3	Date: 2020-11-26	Rev:
KiCad E.D.A. eeschema 5.1.7-a382d34a887ubuntu18.04.1		Id: 67/69

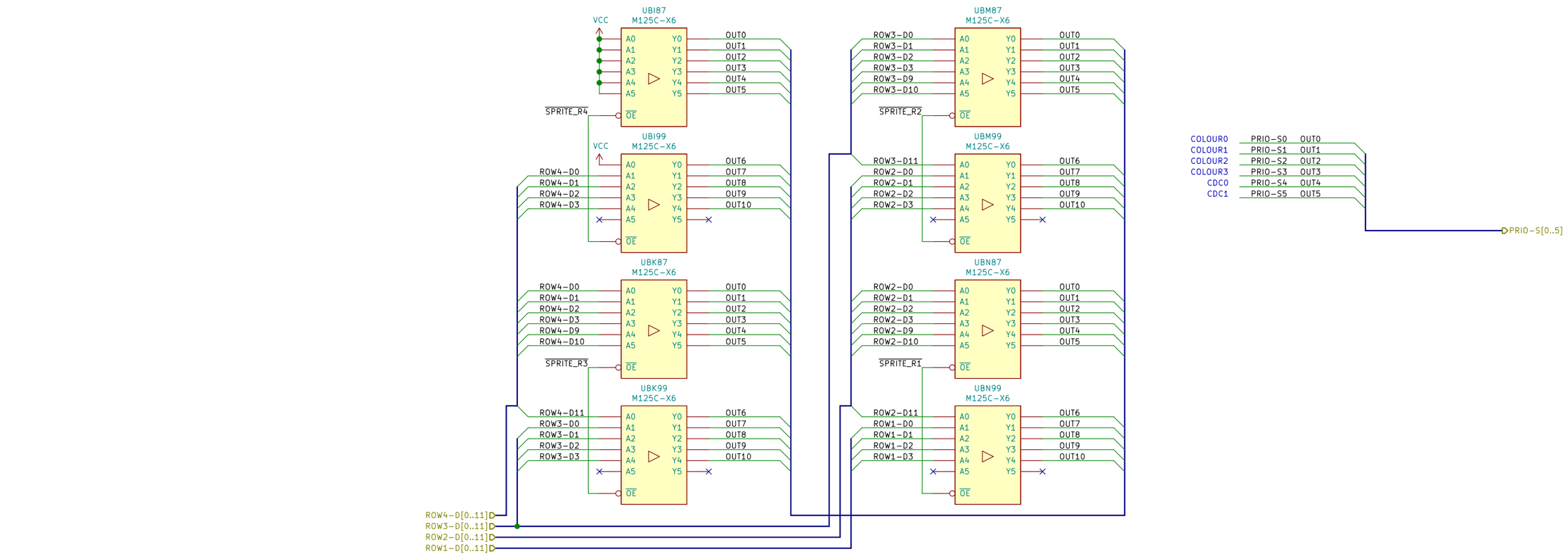

Author: Loïc *WydD* Petit
Licence: CC-BY

Sheet: /lut-assembly/priority-transparency/
File: priority-transparency.sch

Title:

Size: A3	Date: 2020-11-26	Rev:
KiCad E.D.A. eeschema 5.1.7-a382d34a887ubuntu18.04.1		Id: 68/69

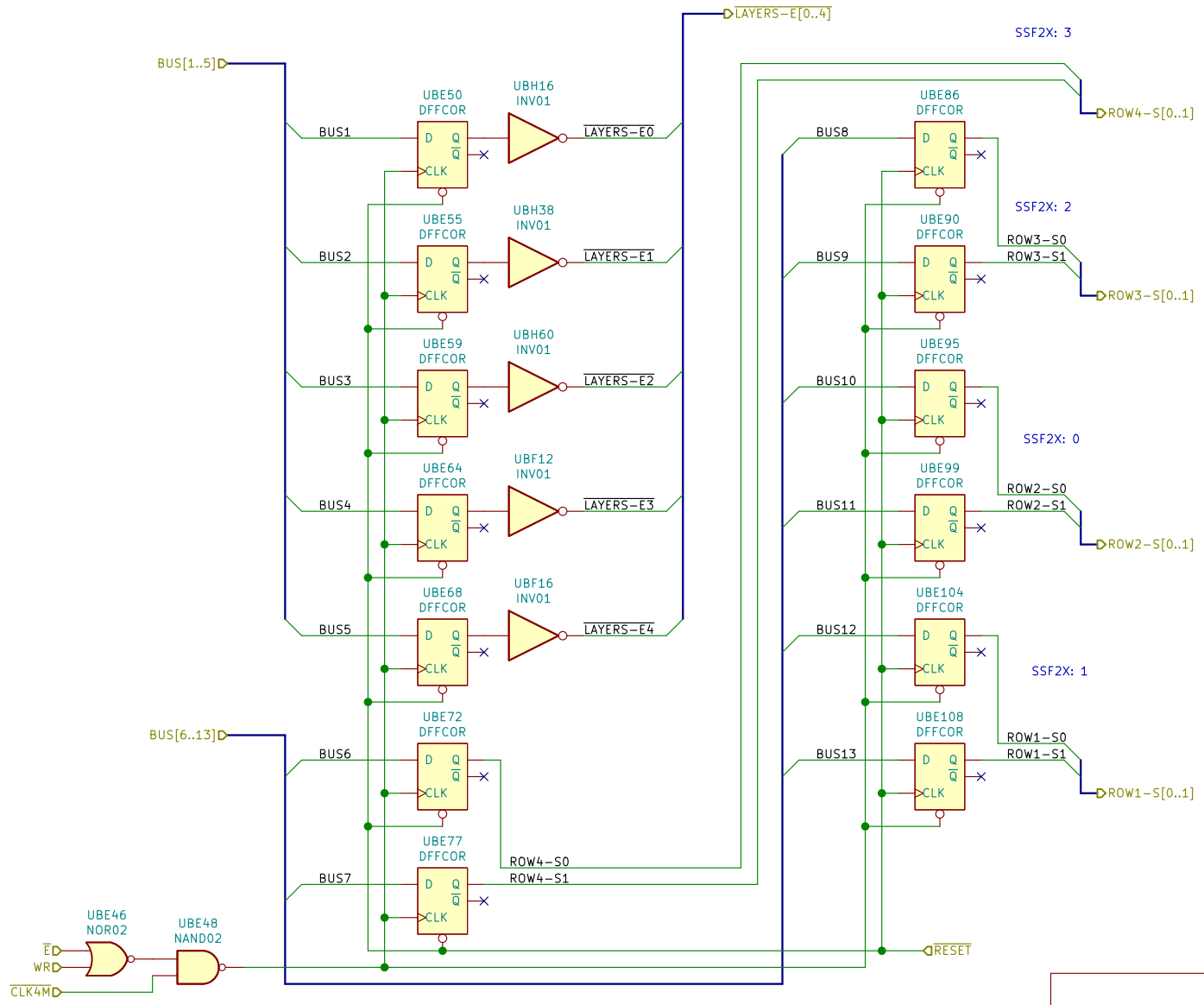

Author: Loïc *WydD* Petit
Licence: CC-BY

Sheet: /lut-assembly/layer-control/
File: layer-control.sch

Title:

Size: A4	Date: 2020-11-26	**Rev:**
KiCad E.D.A. eeschema 5.1.7-a382d34a887ubuntu18.04.1		Id: 69/69